City Hall
80 Broad Street
December 20, 2016
5:00 p.m.

CITY COUNCIL

A. Roll Call

B. Invocation – Councilmember Mitchell

C. Pledge of Allegiance

D. Presentations and Recognitions

1. Presentation of the 2017 Harold Koon Excellence in Volunteer Service Award

2. City of Charleston Employee of the Year Awards

E. Public Hearings

1. An ordinance to adjust the boundary line between the City of Charleston and the Town of James Island as it pertains to property located on Camp Road and designated as Lot 027b on a plat by Cornerstone Surveying & Engineering, Inc. entitled "A final subdivision plat of Charleston County T.M.S. Parcel No. 428-03-00-027 a 1.69 acre tract of land in 'Cocked Hat' subdivision" and a County of Charleston drainage easement lying to the west and along the northern boundary of said tract as shown on said plat. **(AS AMENDED) (SECOND READING)**

2. An ordinance to amend the Zoning Ordinance of the City of Charleston by changing the Zone Map, which is a part thereof, so that property located on Bees Ferry Road (West Ashley) (12.494 acres) (TMS #301-00-00-541) (Council District 5), be rezoned from General Office (GO) and Single-Family Residential (SR-2) classifications to Business Park (BP) classification. The property is owned by Bees Resources LP.

F. Act on Public Hearing Matters

G. Approval of City Council Minutes:

1. December 6, 2016

H. Citizens Participation Period

I. Petitions and Communications:

1. Resolution in support of enacting an Inclusionary Zoning Bill

2. Planning Commission Appointments ***(To be sent under separate cover)***

J. Council Committee Reports:

1. Committee on Traffic and Transportation: (Meeting was held on Tuesday, December 20, 2016 at 3:30 p.m.)

a.) Application for Original Certificate of Public Convenience and Necessity:
-- Rabie Seltaoui, DBA American Puma's Taxi (Taxi)
-- Mirfaiz Samatov, DBA Cool Cab (Taxi)

b.) To amend the Code of The City of Charleston, South Carolina, Chapter 19, Section 19-277(9) to extend the boundaries of the Eastside Neighborhood Residential Parking Permit Boundary to include additional portions of Sheppard, Line, Columbus, Woolfe, Reid, Amherst, Chapel, and South Streets within the Eastside Neighborhood Designated Residential Parking Permit District.

Give first reading to the following bills coming from Traffic and Transportation:

An ordinance to amend the Code of The City of Charleston, South Carolina, Chapter 19, Section 19-277(9) to extend the boundaries of the Eastside Neighborhood Residential Parking Permit Boundary to include additional portions of Sheppard, Line, Columbus, Woolfe, Reid, Amherst, Chapel, and South Streets within the Eastside Neighborhood Designated Residential Parking Permit District.

2. Committee on Public Works and Utilities: (Meeting was held on Tuesday, December 20, 2016 at 3:00 p.m.)

a.) Acceptance and Dedication of Rights-of-Way and Easements

i. Carolina Bay Phase 13A - Acceptance and dedication of Beadboard Drive (50-foot right-of-way), Stonestown Drive (50-foot right-of-way), and Dwellers Court (50-foot and 50-foot right-of-way). Sidewalk is bonded.

a. Title to Real Estate
b. Affidavit for Taxable or Exempt Transfers
c. Plat
d. Exclusive Storm Water Drainage Easements

ii. Maybank Village Phase 2B - Acceptance and dedication of Fontana Street (50-foot right-of-way), Grand Bay Lane (50-foot right-of-way), Harding Court (42-foot right-of-way), Tugalo Street (50-foot right-of-way), and a portion of Timberline Drive (50-foot right-of-way). Sidewalk and final lift asphalt is bonded.

a. Title to Real Estate
b. Affidavit for Taxable or Exempt Transfers
c. Plat (3)
d. Exclusive Storm Water Drainage Easements

iii. 199 East Bay Street - Approval to notify SCDOT that the City intends to accept maintenance responsibility for a portion of East Bay Street (US-52) in conjunction with placement of a grease trap at 199 East Bay Street. Quit claim deed attached.

a. Quit claim deed

3. Committee on Ways and Means:

(Bids and Purchases

(Approval of Year 2017 Stormwater Utility Fund Budget

(Police Department: Approval to submit the FY16 Smart Cities Council Challenge grant application for specialized in-kind services on the City of Charleston's Open Data Dashboard project. No City match is required.

(Parks: Approval to accept the Palmetto Pride – Keep South Carolina Beautiful Grant in the amount of $8,400 for the litter prevention education program and the volunteer cleanup supplies. No City match is required.

(Recreation: Approval to apply for the Allstate Helping Hands in the Community Grant in the amount of $1,000 for the Youth Empowerment Project Ages 10-12. No City match is required. Due to time constraints, this grant was submitted on December 5, 2016.

(Parks-Capital Projects: Approval of a Construction Contract with 21st Century Waterproofing in the amount of $74,700 for the repairs of various cracks and spalls and replacement of joint sealants and bearing pads at the VRTC Parking Garage. With the approval of the project budget, staff is authorized to award and/or amend contracts less than $40,000, to the extent contingency funds exist in the Council approved budget. Approval of this action will institute an $86,000 project budget of which the $74,700 construction contract will be funded. The funding source for this project is the 2016 Parking Facilities, Structural Repairs in the General Operating Budget ($750,000).

(Parks-Capital Projects: Approval of a budget transfer in the amount of $54,340 from the Facilities Maintenance, General Maintenance line item in the Parks Department budget to the Construction, Playground Equipment Maintenance line item for the purchase of playground equipment at Thomas Johnson Playground and Randolph Park Playground. Approval of this action will increase the Playground Equipment Maintenance line item in the Construction division by $54,340 while decreasing the General Maintenance line item in the Facilities Maintenance division by ($54,340) in the Parks Department.

(Public Service: Approval for IPW Construction Group, LLC to clean and grade the Cross Creek outfall ditch in the amount of $70,005

(Planning: Approval to establish a contract in the amount of $498,800.00 for the West Ashley Master Plan with Dover, Kohl & Partners, 1571 Sunset Drive, Coral Gables, FL 33143; Solicitation #16-P026C.

(Bender Street Update

(Charleston School of Law Proposal re: Woolfe Street [Ordinance]

(Information to be placed on Councilmembers' desks)

(An ordinance authorizing the Mayor to execute the necessary documents on behalf of the City of Charleston as set forth in the Settlement Agreement and Release between the City of Charleston and Ct/St. John's Marina, LLC ("Marina"), which is attached

hereto and incorporated herein as Exhibit 1 pertaining to the payment of $25,000 to the Marina by the City and the transfer by the City of Charleston to the Marina of all rights, title and interest in the bridge and certain land underneath the bridge by Quit-Claim Deed, said property being located off of Old Maybank Highway, on John's Island, South Carolina.

Give first reading to the following bills coming from Ways and Means:

Ordinance: Charleston School of Law Proposal re: Woolfe Street

An ordinance authorizing the Mayor to execute the necessary documents on behalf of the City of Charleston as set forth in the Settlement Agreement and Release between the City of Charleston and Ct/St. John's Marina, LLC ("Marina"), which is attached hereto and incorporated herein as Exhibit 1 pertaining to the payment of $25,000 to the Marina by the City and the transfer by the City of Charleston to the Marina of all rights, title and interest in the bridge and certain land underneath the bridge by Quit-Claim Deed, said property being located off of Old Maybank Highway, on John's Island, South Carolina.

K. Bills up for Second Reading:

*1. An ordinance to amend the Zoning Ordinance of the City of Charleston by changing the Zone Map, which is a part thereof, so that property located on Maybank Highway at Promenade Vista Street (James Island) (approximately 10.57 acres) (TMS #424-00-00-001) (Council District 6), be rezoned from Gathering Place (GP) classification to Planned Unit Development (PUD) classification. The property is owned by CPC James Island, LLC. (**AS AMENDED**)*

*2. An ordinance to amend the Zoning Ordinance of the City of Charleston by changing the Zone Map, which is a part thereof, so that property located on Coburg Road (Overture PUD) (West Ashley) (approximately 6.15 acres) (TMS# 349-08-00-001) (Council District 11), be rezoned from General Business (GB) classification to Planned Unit Development (PUD) classification. The property is owned by St. Andrews Parish LLC. (**AS AMENDED**)*

3. An ordinance providing for the distribution of funds for Fiscal Year 2017 generated by the Municipal Accommodations Fee as required by Ordinance No. 1996-18.

4. An ordinance providing for the distribution of funds for Fiscal Year 2017 generated by the Municipal Accommodations Fee as required by Ordinance No. 1996-56.

*5. An ordinance to make appropriations to meet the liabilities of the City of Charleston for the fiscal year ending December 31, 2017. (**AS AMENDED**)*

*6. An ordinance to raise funds for the fiscal year ending December 31, 2017 and to meet the appropriation of $199,795,286 authorized by Ordinance 2016-____ ratified the 20th day of December, 2016. (**AS AMENDED**)*

7. An ordinance authorizing the Mayor to execute on behalf of the City a Lease between the City, as Landlord, and the International African American Museum and the Pinckney Foundation, as tenants, pertaining to property owned by the City located at 113 Calhoun Street.

8. An ordinance to provide for the annexation of property known as 204 Tall Oak Avenue (0.22 acre) (TMS# 418-13-00-066), West Ashley, Charleston County, to the City of Charleston, shown within the area annexed upon a map attached hereto and make it part of District 9. The property is owned by Trevor Owen Spencer.

9. An ordinance to provide for the annexation of property known as 1501 Morgan Campbell Court (0.088 acre) (TMS# 351-12-00-116), West Ashley, Charleston County, to the City of Charleston, shown within the area annexed upon a map attached hereto and make it part of District 9. The property is owned by Ayush Gupta.

10. An ordinance to provide for the annexation of property known as 1503 Morgan Campbell Court (0.08 acre) (TMS# 351-12-00-219), West Ashley, Charleston County, to the City of Charleston, shown within the area annexed upon a map attached hereto and make it part of District 9. The property is owned by Alex Murphy and Katherine Beul.

11. An ordinance to provide for the annexation of property known as 1505 Morgan Campbell Court (0.09 acre) (TMS# 351-12-00-220), West Ashley, Charleston County, to the City of Charleston, shown within the area annexed upon a map attached hereto and make it part of District 9. The property is owned by Amelia Phillips Hale and Daniel Hale.

12. An ordinance to provide for the annexation of property known as 1507 Morgan Campbell Court (0.10 acre) (TMS# 351-12-00-221), West Ashley, Charleston County, to the City of Charleston, shown within the area annexed upon a map attached hereto and make it part of District 9. The property is owned by William G. Wynn, Jr.

13. An ordinance to provide for the annexation of property known as 1509 Morgan Campbell Court (0.25 acre) (TMS# 351-12-00-218), West Ashley, Charleston County, to the City of Charleston, shown within the area annexed upon a map attached hereto and make it part of District 9. The property is owned by Matthew and Brittany Cauller.

14. An ordinance to provide for the annexation of property known as 1510 Morgan Campbell Court (0.14 acre) (TMS# 351-12-00-216), West Ashley, Charleston County, to the City of Charleston, shown within the area annexed upon a map attached hereto and make it part of District 9. The property is owned by Rachel Kelly Bishop.

15. An ordinance to provide for the annexation of property known as 1512 Morgan Campbell Court (0.14 acre) (TMS# 351-12-00-215), West Ashley, Charleston County, to the City of Charleston, shown within the area annexed upon a map attached hereto and make it part of District 9. The property is owned by James F. Price.

16. An ordinance to provide for the annexation of property known as 1513 Morgan Campbell Court (0.25 acre) (TMS# 351-12-00-217), West Ashley, Charleston County, to the City of Charleston, shown within the area annexed upon a map attached hereto and make it part of District 9. The property is owned by Rob and Sophie Fulmer.

17. An ordinance to provide for the annexation of property known as 1514 Morgan Campbell Court (0.12 acre) (TMS# 351-12-00-214), West Ashley, Charleston County, to the City of Charleston, shown within the area annexed upon a map attached hereto and make it part of District 9. The property is owned by Lauren and David McCullough.

18. An ordinance to provide for the annexation of property located on Ashley Hall Road (0.16 acre) (TMS# 351-12-00-213), West Ashley, Charleston County, to the City of Charleston, shown within the area annexed upon a map attached hereto and make it part of District 9. The property is owned by Glenda M. Hauge.

19. An ordinance to amend the Zoning Ordinance of the City of Charleston by changing the Zone Map, which is a part thereof, so that 221 Spring Street & 194 Cannon Street (Peninsula) (approximately 1.58 acres) (TMS# 460-10-04-011 and 460-10-04-013) (Council District 6), be rezoned from General Business (GB) classification to Planned Unit Development (PUD) classification. The property is owned by Jem Management Co and Calfran properties. (DEFERRED)

20. An ordinance to provide for the annexation of property known as 2947 Maybank Hwy (2.97 acres) (TMS# 313-00-00-088), Johns Island, Charleston County, to the City of Charleston, shown within the area annexed upon a map attached hereto and make it part of District 5. The property is owned by Oak Family Properties LLC. (DEFERRED)

21. An ordinance to provide for the annexation of property known as property located on Ashley Hall Plantation Road (44.59 acres) (TMS# 353-00-00-003 and 353-00-00-004), West Ashley, Charleston County, to the City of Charleston, shown within the area annexed upon a map attached hereto and make it part of District 2. The property is owned by the Estate of Rosina Kennerty Siegnious. (DEFERRED)

22. An ordinance to amend Chapter 54 of the Code of the City of Charleston (Zoning Ordinance) by amending Section 54-208.1 Bed and Breakfasts not located within the Old and Historic District, to clarify where Bed and Breakfasts are permitted in areas outside the Old and Historic District. (DEFERRED FOR PUBLIC HEARING)

23. An ordinance to amend the Old and Historic District and Old City District Regulations of Chapter 54 of the Code of the City of Charleston (Zoning Ordinance) to

amend the definition of structure, to provide definitions for height, scale, mass and immediate surroundings, immediate surrounding area and neighborhood, to clarify the authority of the Board of Architectural Review as it pertains to its review of height, scale and mass of new construction to achieve compatibility and proper form and proportion between new structures and those in its immediate surroundings, and to codify certain policy statements for the use in evaluation applications. (DEFERRED FOR PUBLIC HEARING)

L. Bills up for First Reading

1. An ordinance to amend the Zoning Ordinance of the City of Charleston by changing the Zone Map, which is a part thereof, so that property located on Ashley Hall Plantation Road (West Ashley) (approximately 44.59 acres) (TMS #353-00-00-003 and 353-00-00-004) (Council District 2), be zoned to Single-Family Residential (SR-1) classification and Landmark Overlay Zone (LMK) on a portion of the property. The property is owned by the Estate of Rosina Kennerty Siegnious.

2. An ordinance to amend the Zoning Ordinance of the City of Charleston by changing the Zone Map, which is a part thereof, so that 194 Cannon Street and 221 Spring Street (including the adjacent rights-of-way of Spring Street, Vaughn Street and Cannon Street) (Peninsula) (approximately 2.75 acres) (TMS #460-10-04-013 and 460-10-04-011) (Council District 6), be rezoned from the 50/25 Old City Height District Overlay classification to the 85/125 Old City Height District Overlay classification. The property is owned by Jem Management Co and Calfran Properties.

3. An ordinance to amend Chapter 54 of the Code of the City of Charleston (Zoning Ordinance) by amending Section 54-220 Accommodations Overlay Zone, by inserting language to preserve Mixed-Use Districts; prohibit the displacement of housing by accommodations and consider the effects of housing units to be altered or replaced on the housing stock and whether requirements to protect the affordability of the housing units should be attached to an accommodations special exception approval; prohibit the displacement or reduction of office space by accommodations to be located within areas on the Peninsula designated "A-1" on the Accommodations Overlay Zoning Map and on streets with office use as a predominant use; prohibit the displacement of more than 25 percent of ground floor, store front retail space by accommodations uses on streets with ground floor, store front retail as a dominant use; prohibit an overconcentration of accommodations units within areas on the Peninsula designated "A-1" on the Accommodations Overlay Zoning Map; amend revised Subsection B. 1. (g) by deleting wording regarding pedestrian activity and transit system usage and inserting language regarding the location and design of guest drop off and pick up areas; and amend revised Subsection B. 1. (h) 15 to require additional information on parking and public transit provisions for employees **(AS AMENDED)** *(DEFERRED)*

4. An ordinance to amend the Zoning Ordinance of the City of Charleston by changing the Zone Map, which is a part thereof, so that property located off North Westchester Road (West Ashley) (2.225 acres) (TMS #309-15-00-070) (Council District 7), be rezoned from Light Industrial (LI) classification to General Business (GB) classification. *(DEFERRED)*

5. An ordinance to amend provisions of Chapter 54 of the Code of the City of Charleston (Zoning Ordinance) by amending Part 12 – Gathering Place to change district name and specific details within, by amending Article 2, Part 3, Table of Permitted Uses to change district name, by amending Sec. 54-301, Table 3.1: Height, Area and Setback Regulations adding a new row, by amending Sec. 54-201, Base Zoning Districts to change district name, by amending Article 2, Part 11, Sec. 54-268 designation of Design Review District, Review Authority, Scope of Authority and Exemptions to change district name, by amending Article 3, Part 8, Sec. 54-347 landscape buffer requirements to change district name. *(DEFERRED)*

6. An ordinance to amend the Zoning Ordinance of the City of Charleston by changing the Zone Map, which is a part thereof, so that 61 Cannon Street (Cannonborough-Elliottborough - Peninsula) (0.38 acre) (TMS #460-12-01-008) (Council District 4), be rezoned from Limited Business (LB) classification to Mixed-Use Workforce Housing (MU-1/WH) classification. ***(Planning Commission recommends disapproval; requires ¾ vote of Council.)*** *(DEFERRED)*

7. An ordinance to amend the Code of the City of Charleston, South Carolina, Chapter 21, Section 115 to provide regulations for the operation of unmanned aerial vehicles. *(DEFERRED)*

M. Miscellaneous Business:

1. Executive Session re: DeReef Park

2. The next regular meeting of City Council will be January 10, 2017 at 5:00 p.m. at City Hall, 80 Broad Street.

E1.)

Ratification
Number_____

AN ORDINANCE

TO ADJUST THE BOUNDARY LINE BETWEEN THE CITY OF CHARLESTON AND THE TOWN OF JAMES ISLAND AS IT PERTAINS TO PROPERTY LOCATED ON CAMP ROAD AND DESIGNATED AS LOT 027B ON A PLAT BY CORNERSTONE SURVEYING & ENGINEERING, INC. ENTITLED " A FINAL SUBDIVISION PLAT OF CHARLESTON COUNTY T.M.S. PARCEL NO. 428-03-00-027 A 1.69 ACRE TRACT OF LAND IN 'COCKED HAT' SUBDIVISION" **AND A COUNTY OF CHARLESTON DRAINAGE EASEMENT LYING TO THE WEST AND ALONG THE NORHTERN BOUNDARY OF SAID TRACT AS SHOWN ON SAID PLAT. (AS AMENDED)**

BE IT ORDAINED BY THE MAYOR AND COUNCILMEMBERS OF CHARELSTON, IN CITY COUNCIL ASSEMBLED:

Section 1. Findings. S. C. Code Ann. §5-3-40 provides, in pertinent part, that "whenever it is proposed to extend the corporate limits of any municipality by inclusion of territory of another adjacent municipality, in whole or in part, the governing bodies of the municipalities may, after public hearing, stipulate and agree on terms of consolidation or boundary adjustment by ordinance adopted by each municipality…". The Town of James Island, a municipality adjacent to the City of Charleston, is poised to construct a new Town Hall on three parcels of land on James Island, two of which are located in the Town of James Island, and one of which is located in the City of Charleston. The parcel of land in the City of Charleston is owned by the Town of James Island and is designated for overflow parking for the new Town Hall and shared joint parking for the First Baptist Church of James Island. To facilitate permitting and consolidating of costs associated with the development of this parcel and the new Town Hall, the Town of James Island has requested that the boundary line between the City of Charleston and Town of James Island be adjusted so as to include within the boundaries of the Town of James Island the parcel it intends to develop as part of its new Town Hall that is now in the City of Charleston. City Council finds this request to be reasonable and in furtherance of public efficiency and intergovernmental cooperation.

Section 2. The boundary of the City of Charleston be, and hereby is, adjusted by removing from the City of Charleston and including in the Town of James Island that certain parcel of land designated as Lot-027B on a plat by Cornerstone Surveying & Engineering, Inc., entitled "A Final Subdivision Plat of Charleston County T.M.S. Parcel No. 428-03-00-027 a 1.69 Acre Tract of Land in 'Cocked Hat' Subdivision", **and also the County of Charleston drainage easement lying to the west and along the northern boundary of said** Tract as shown on said plat, said plat being attached to this Ordinance as Exhibit A and made a part hereof, with Lot-027B being shown between the letters A-B-C-D-G-F-H-I-J-K-L-M-A **and the drainage easement being shown as running east from Dills Bluff Road to Lot- 027Band then continuing along the northern boundary of Lot-027B, all as outlined in red on Exhibit A to this Ordinance.**

Section 3. This Ordinance shall become effective upon ratification.

Ratified in City Council this _____day of _____ in the Year of Our Lord 2016, in the ____ Year of Independence of the United States of America.

By: _____
John J. Tecklenburg.
Mayor, City of Charleston

Attest: _____
Vanessa Turner Maybank
Clerk of Council

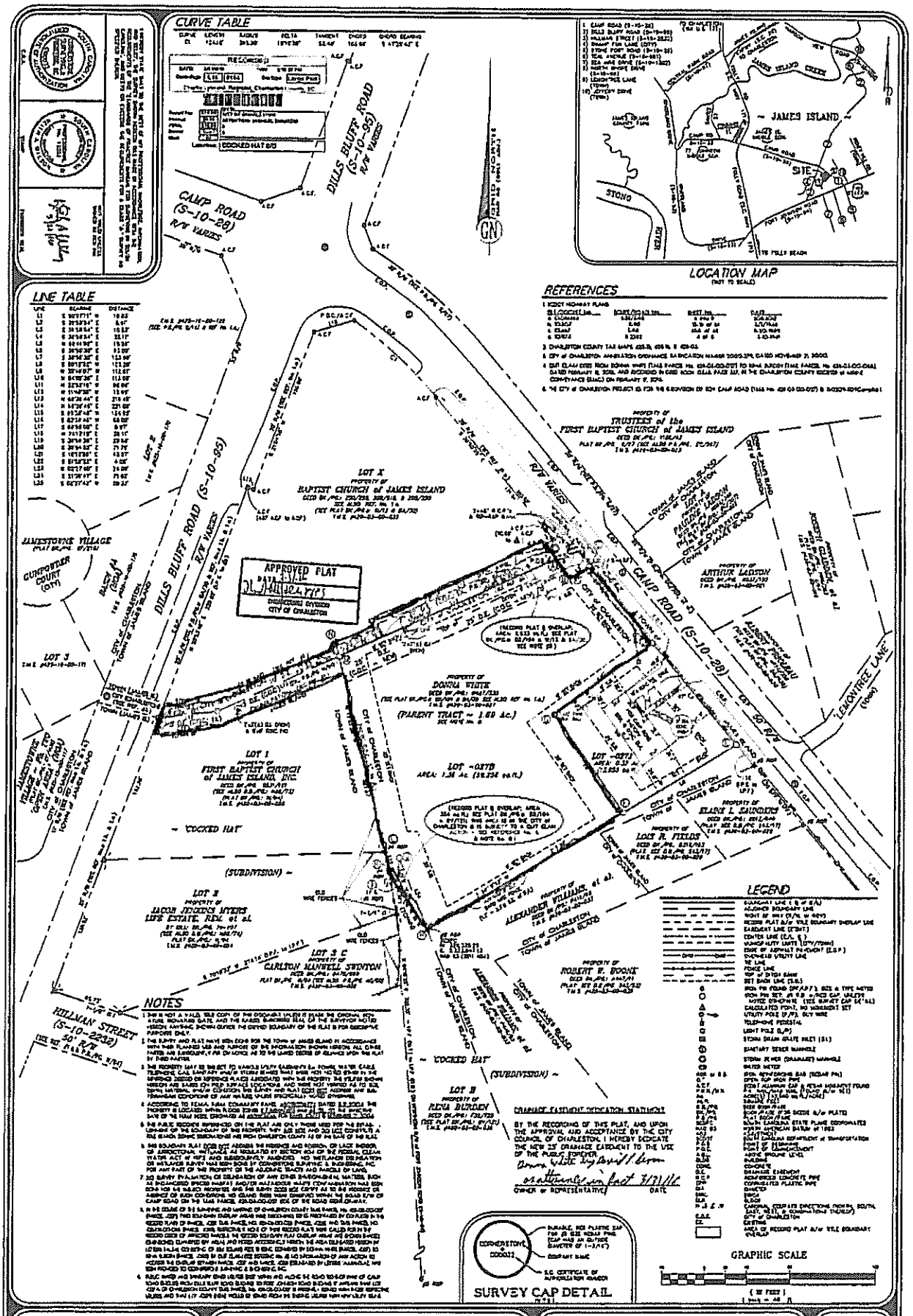
CURVE TABLE
LINE TABLE
LOCATION MAP
REFERENCES
LEGEND
NOTES
SURVEY CAP DETAIL
GRAPHIC SCALE
DILLS BLUFF ROAD (S-10-95)
CAMP ROAD (S-10-28)
HILLMAN STREET (S-10-2232)
LEMONTREE LANE
JAMES ISLAND
SITE
LOT X
BAPTIST CHURCH of JAMES ISLAND
LOT 1
FIRST BAPTIST CHURCH of JAMES ISLAND, INC.
LOT 2
REVA BURDEN
LOT 3
CARLTON MAXWELL STANTON
DONNA WHITE
(PARENT TRACT ~ 1.69 Ac.)
LOT -027A
LOT -027B
~ COCKED HAT ~
(SUBDIVISION) ~
APPROVED PLAT
DRAINAGE EASEMENT DEDICATION STATEMENT
CORNERSTONE SURVEYING & ENGINEERING, INC.
A FINAL SUBDIVISION PLAT OF
CHARLESTON COUNTY T.M.S. PARCEL No. 428-03-00-027
A 1.69 Acre TRACT of LAND in 'COCKED HAT' SUBDIVISION
BEING THE PROPERTY, NOW or FORMERLY OF
DONNA WHITE
SUBDIVIDED INTO
LOT -027A (0.32 ACRE) & LOT -027B (1.36 ACRES)
FOR The TOWN of JAMES ISLAND
LOCATED AT 1109 CAMP ROAD (S-10-28) ON JAMES ISLAND
CITY of CHARLESTON, CHARLESTON COUNTY, SOUTH CAROLINA

E2

Ratification
Number_____

AN ORDINANCE

TO AMEND THE ZONING ORDINANCE OF THE CITY OF CHARLESTON BY CHANGING THE ZONE MAP, WHICH IS A PART THEREOF, SO THAT PROPERTY LOCATED ON BEES FERRY ROAD (WEST ASHLEY) (12.494 ACRES) (TMS #301-00-00-541) (COUNCIL DISTRICT 5), BE REZONED FROM GENERAL OFFICE (GO) AND SINGLE-FAMILY RESIDENTIAL (SR-2) CLASSIFICATIONS TO BUSINESS PARK (BP) CLASSIFICATION. THE PROPERTY IS OWNED BY BEES RESOURCES LP.

BE IT ORDAINED BY THE MAYOR AND COUNCILMEMBERS OF CHARLESTON, IN CITY COUNCIL ASSEMBLED:

Section 1. That the Zoning Ordinance of the City of Charleston be, and the same hereby is amended, by changing the zone map thereof so as to rezone the property described in Section 2 hereof by changing the zoning designation from General Office (GO) and Single-Family Residential (SR-2) classifications to Business Park (BP) classification.

Section 2. The property to be rezoned is described as follows:

Property located on Bees Ferry Road (West Ashley) (12.494 acres) (TMS #301-00-00-541)

Section 3. This ordinance shall become effective upon ratification.

Ratified in City Council this _____day of _____ in the Year of Our Lord _____, in the _____ Year of Independence of the United States of America.

By: _____
John J. Tecklenburg
Mayor, City of Charleston

Attest: _____
Vanessa Turner Maybank
Clerk of Council

City of Charleston

Planning Commission
November 16, 2016

Area

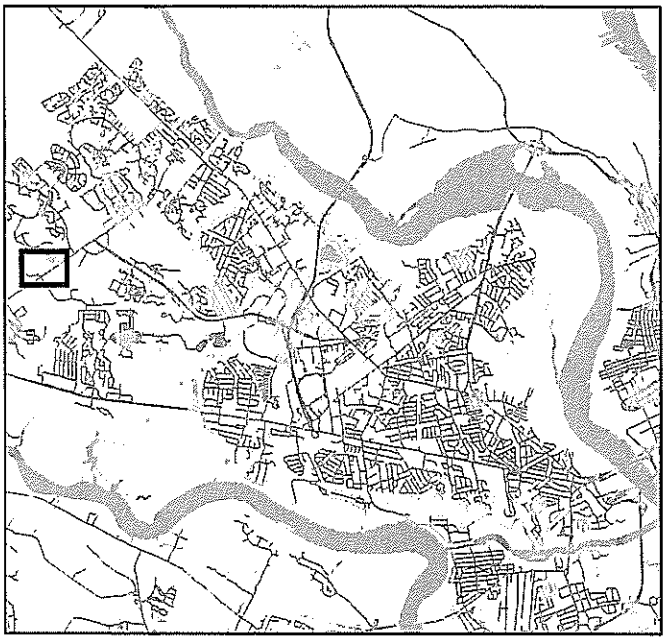

Rezoning 2

Bees Ferry Rd (West Ashley)

TMS# 3010000541

12.494 ac.

Request rezoning from General Office (GO) and Single-Family Residential (SR-2) to Business Park (BP).

Owner: Bees Resources LP
Applicant: Forsberg Engineering

Location

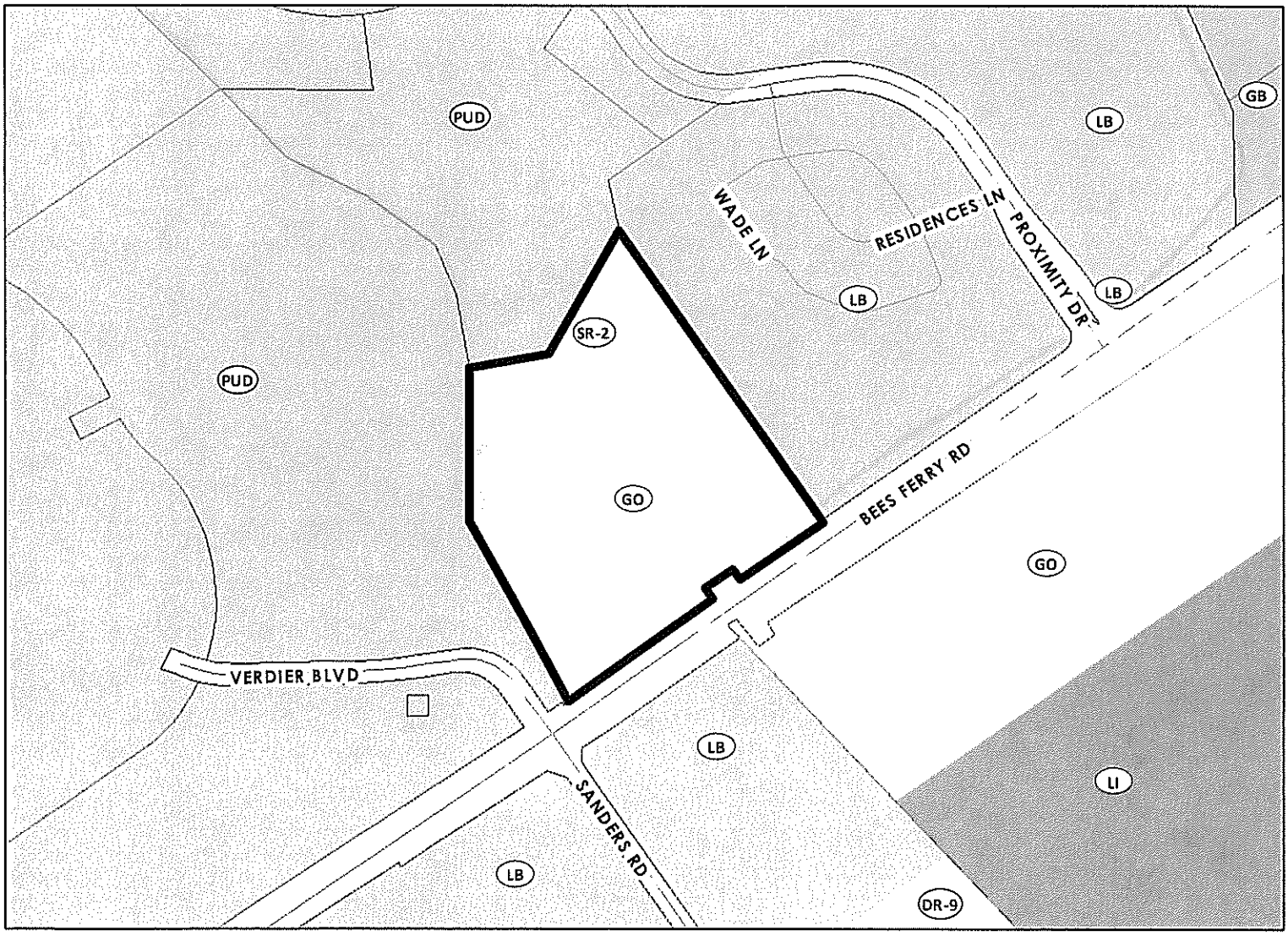

N

II.)

A RESOLUTION: INCLUSIONARY ZONING

WHEREAS,in the City and County of Charleston and Municipalities across the State of South Carolina there is a critical shortage of safe, decent and affordable residential housing available to low and moderate-income families; and

WHEREAS, the affordable housing shortage constitutes a danger to the health, safety, and welfare of residents of the State, and is a barrier to sound economic growth and sustainable economic development for the City of Charleston and South Carolina counties and municipalities; and

WHEREAS, the lack of affordable housing has a serious effect on the lives of the families who are struggling to meet housing costs on limited incomes and also has a serious effect on local business as employers are concerned that there employees are forced to move out of the area and either quit their jobs or spend long hours commuting to work; and

WHEREAS, the purpose of this Resolution is to provide State Legislators and other political bodies an understanding of the need to authorize inclusionary zoning to increase the amount of affordable housing available for low and moderate-income families in the State of South Carolina; and

WHEREAS, Inclusionary Zoning means a zoning regulation, requirement, or condition of development, imposed by ordinance or regulation, pursuant to any special or conditional permit, special exception, or subdivision plan, that promotes the development of affordable dwelling units; and

WHEREAS, the General Assembly can assist in creating more affordable housing opportunities for the benefit of all cities and counties in the State and their citizens and in strengthening the affordable housing market in the state; now and in the future; and

WHEREAS, the City of Charleston requests the governor and state lawmakers enact an Inclusionary Zoning Bill to address the shortage of affordable housing in the State of South Carolina;

NOW, THEREFORE, BE IT RESOLVED that the Mayor and City Council of the City of Charleston, in Council Assembled, strongly urge state lawmakers to enact this legislation.

Done this _____day of _____2016.

_____

John J. Tecklenburg, Mayor
City of Charleston

ATTEST: _____
Vanessa Turner Maybank
Clerk of Council

J1(b)

Ratification Number_____

AN ORDINANCE

TO AMEND THE CODE OF THE CITY OF CHARLESTON, SOUTH CAROLINA, CHAPTER 19, SECTION 19-277(9) TO EXTEND THE BOUNDARIES OF EASTSIDE NEIGHBORHOOD RESIDENTIAL PARKING PERMIT BOUNDARY TO INCLUDE ADDITIONAL PORTIONS OF SHEPPARD, LINE, COLUMBUS, WOOLFE, REID, AMHERST, CHAPPEL, AND SOUTH STREET WITHIN THE EASTSIDE NEIGHBORHOOD DESIGNATED RESIDENTIAL PARKING PERMIT DISTRICT.

BE IT ORDAINED BY THE MAYOR AND COUNCILMEMBERS IN CITY COUNCIL ASSEMBLED:

Section 1. Chapter 19, Section 19-277(9), of the Code of the City of Charleston is hereby amended by deleting the current section and replacing it with the following phrases, which shall read as follows:

"(9) That area of the City of Charleston more commonly known as the Eastside Neighborhood, designated as Residential Parking District I, more fully shown on the attached map, marked as Exhibit I, and incorporated herein by reference, said area in the City of Charleston commencing at the intersection of East Bay Street and Cooper Street and running along the northern side of Cooper Street in an westerly direction to the end of Cooper Street; thence turning in an easterly direction along the southern side of Cooper Street to the intersection of Cooper Street and Nassau Street; thence turning and running in an southerly direction along the western side of Nassau Street to the intersection of Nassau Street and Sheppard Street; thence turning and running in an westerly direction on the northern side of Sheppard Street to the intersection of Sheppard and Meeting Street; thence turning and running in an easterly direction on the southern side of Sheppard Street to the intersection of Sheppard and Ducs Court; thence turning and running in an southerly direction on the westerns side of Ducs Court to the intersection of Ducs Court and Line Street; thence turning and running in an westerly direction on the northern side of Line Street to the intersection of Line Street and Meeting Street; thence turning in an easterly direction along the southern side of Line Street to the intersection of Line Street and Nassau Street; thence turning and running in an southerly direction on the western side of Nassau Street to the intersection of Nassau Street to Columbus Street; thence turning in an westerly direction along the northern side of Columbus Street to the intersection of Columbus and Meeting Street; thence turning in an easterly direction on the southern side of Columbus Street to the intersection of Columbus and Nassau Street; thence turning in an southerly direction on the western side of Nassau Street to the intersection of Nassau Street to Woolfe Street; thence turning in an westerly direction on the northern side of Woolfe Street to the intersection of Woolfe and Meeting Street; thence turning in an easterly direction on the southern side of Woolfe Street to the intersection of Woolfe Street and Nassau Street; thence turning in an southerly direction on the western side of Nassau Street to the intersection of Reid Street; thence turning in an westerly direction along the northern

side of Reid Street to the intersection of Reid Street and Meeting Street; thence turning in and easterly direction on the southern side of Reid Street to the intersection of Reid Street and Nassau Street; thence turning in an southerly direction on the westerns side of Nassau Street to the intersection of Mary Street; thence turning in an northerly direction on the eastern side of Nassau Street to the intersection of South Street; thence turning in an easterly direction along the southern side of South Street to the intersection of America Street; thence turning in an southerly direction on the western side of America Street to the intersection of Mary Street; thence by the centerline in an southerly direction to the intersection of Chapel Street; thence turning in an easterly direction on the northern side of Chapel Street to the intersection of Drake Street; thence turning in an northerly direction by the centerline of Drake Street to the intersection of Reid Street; thence turning in an westerly direction by the centerline of Reid Street to the intersection of America Street; thence turning in an northerly direction along the eastern side of America Street to the intersection of Amherst Street; thence turning in an easterly direction on the southern side of Amherst Street to the intersection of East Bay Street; thence turning in an northerly direction along the western side of East Bay to the beginning at Cooper Street."

Section 2. This Ordinance shall become effective upon ratification.

Ratified in City Council this_____ day of _____ in the Year of Our Lord, 2016, in the _____ Year of Independence of the United States of America.

By: _____
John J. Tecklenburg
Mayor, City of Charleston

ATTEST: _____
Vanessa Turner Maybank
Clerk of Council

City of Charleston - Peninsula Residential Parking District I

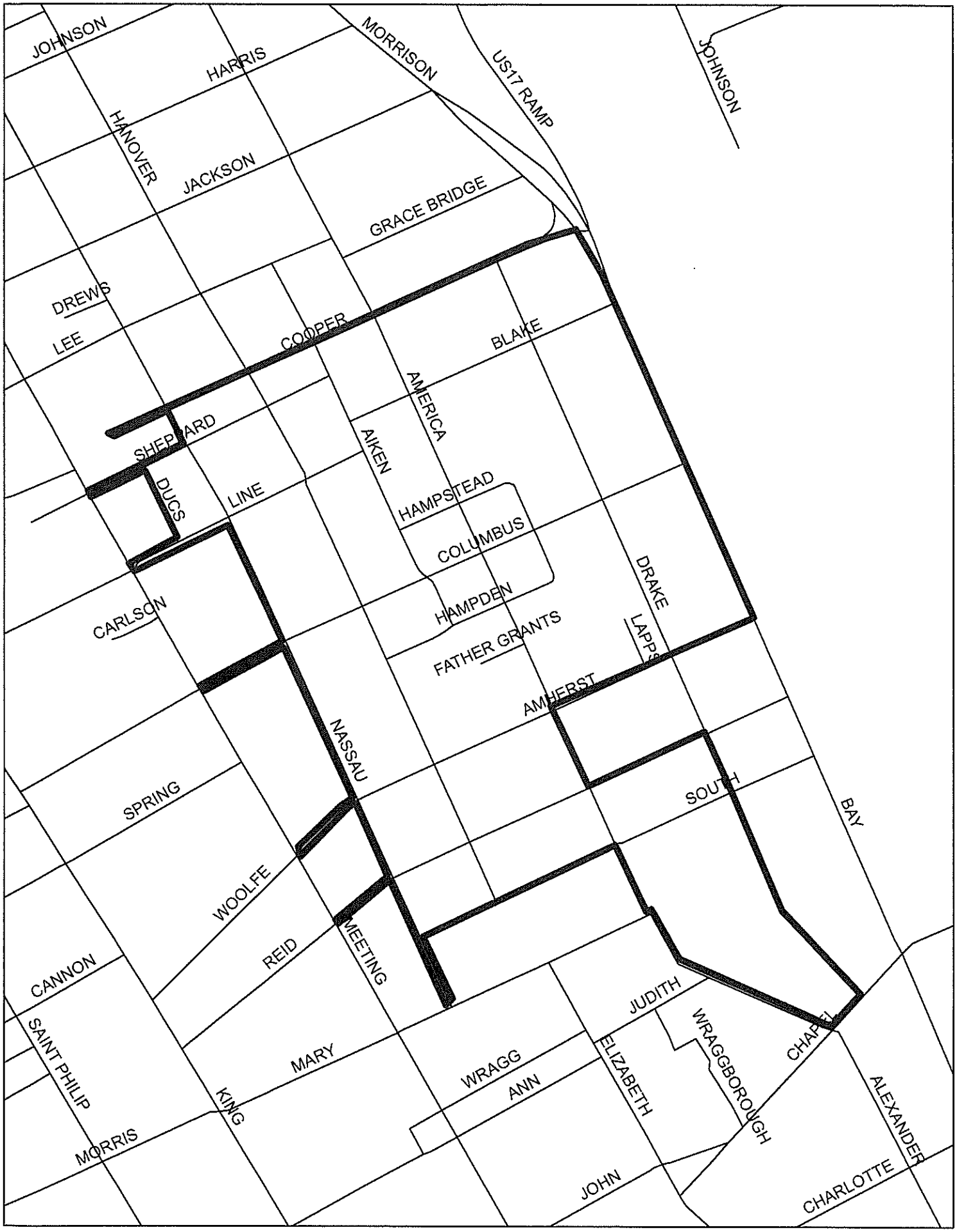

J2(a)(1

STATE OF SOUTH CAROLINA)
)
COUNTY OF CHARLESTON)

TITLE TO REAL ESTATE

KNOW ALL MEN BY THESE PRESENTS, that Centex Homes, a Nevada general partnership ("Grantor") in the state aforesaid, for and in consideration of the sum of ONE AND 00/100 DOLLAR ($1.00), being the true consideration to it in hand paid at and before the sealing of these presents by the CITY OF CHARLESTON, the receipt whereof is hereby acknowledged, has granted, bargained, sold and released, and by these presents does grant, bargain, sell and release unto the said CITY OF CHARLESTON ("Grantee"), its successors and assigns, forever, the following described property which is granted, bargained, sold and released for the use of the public forever:

All of the property underneath, above, and containing those certain streets, roads, drives, and cul-de-sacs situate, lying and being in the City of Charleston, County of Charleston State of South Carolina, identified as (list street names) Beadboard Drive, Stonestown Drive, Dweller Court

as shown and designated on a plat entitled A FINAL SUBDIVISION PLAT OF CAROLINA BAY, PHASE 13A A PORTION OF THE ESSEX FARMS PUD OWNED BY CENTEX HOMES, A NEVADA GENERAL PARTNERSHIP LOCATED IN THE CITY OF CHARLESTON CHARLESTON COUNTY, SOUTH CAROLINA

prepared by SW+A Surveying, LLC, dated May 9, 2016, revised September 20, 2016, and recorded on _____ in Plat Book _____ at Page _____ in the RMC Office for Charleston County. Said property butting and bounding, measuring and containing, and having such courses and distances as are shown on said plat. Reference being had to the aforesaid plat for a full and complete description, being all of the said dimensions, a little more or a little less.

This being a portion of the property conveyed to Grantor herein by deed of the ** _____ dated ** _____ and recorded ** _____ in Book ** _____ at Page ** _____ in the RMC Office for Charleston County, South Carolina.

Grantee's Mailing Address:

City of Charleston
Department of Public Service
Engineering Division
2 George Street
Suite 2100
Charleston, South Carolina 29401

Portion of TMS No.: 309-00-00-054 & 307-00-00-004

**This being a portion of the property conveyed to Grantor herein by (i) deed of Essex Farms, LLC, dated May 1, 2007, and recorded May 3, 2007, in Book J624, at Page 249, in the RMC Office for Charleston County, South Carolina; and (ii) deed of Kiawah Raccoon Run, LLC, dated May 31, 2011, and recorded June 6, 2011, in Book B0190, at Page 810, in the RMC Office for Charleston County, South Carolina

TOGETHER with all and singular, the rights, members, hereditaments and appurtenances to the said premises belonging, or in anywise incident or appertaining.

TO HAVE AND TO HOLD, all and singular, the said premises before mentioned unto the CITY OF CHARLESTON, its successors and assigns forever.

AND Grantor does hereby bind itself and its heirs, executors and administrators, to warrant and forever defend, all and singular, the said premises unto the said City of Charleston, heirs and assigns, against Grantor and its heirs, and all persons whomsoever lawfully claiming, or to claim the same or any part thereof.

WITNESS our Hand(s) and Seal(s) this 7 day of September 20 1 6.

SIGNED, SEALED AND DELIVERED
IN THE PRESENCE OF:

Witness Number One

Printed Name

Witness Number Two

Printed Name

Grantor CENTEX HOMES, a Nevada general partnership
By: Centex Real Estate Corporation,
a Nevada corporation, Its: Managing General Partner

Printed Name Matthew Raines
Division Vice President

****

STATE OF South Carolina)
) ACKNOWLEDGEMENT
COUNTY OF CHARLESTON)

This foregoing instrument was acknowledged before me (the undersigned notary) by Matthew Raines, the Division Vice President of CENTEX HOMES, a Nevada general partnership, on behalf of the Grantor on the 7 day of Septembe, 2016.

Signature of Notary: Meagan Whitlow

Print Name of Notary: Meagan Whitlow

Notary Public for South Carolina

My Commission Expires: 09-14-2025

SEAL OF NOTARY

STATE OF SOUTH CAROLINA)

COUNTY OF CHARLESTON) AFFIDAVIT FOR TAXABLE OR EXEMPT TRANSFERS

PERSONALLY appeared before me the undersigned, who being duly sworn, deposes and says:

1. I have read the information on this affidavit and I understand such information.

2. The property was transferred by CENTEX HOMES, a Nevada general partnership to City of Charleston on _____.

3. Check one of the following: The deed is

   (A)_____ subject to the deed recording fee as a transfer for consideration paid or to be paid in money or money's worth.

   (B)_____ subject to the deed recording fee as a transfer between a corporation, a partnership, or other entity and a stockholder, partner, or owner of the entity, or is a transfer to a trust or as distribution to a trust beneficiary.

   (C)✓ exempt from the deed recording fee because (See Information section of affidavit): conveyance to governmental entity (explanation required) (If exempt, please skip items 4-7, and go to item 8 of this affidavit.)

If exempt under exemption #14 as described in the Information section of this affidavit, did the agent and principal relationship exist at the time of the original sale and was the purpose of this relationship to purchase the realty?
Check Yes ____ or No ____

4. Check one of the following if either item 3(a) or item 3(b) above has been checked. (See Information section of this affidavit):

   (A)_____ The fee is computed on the consideration paid or to be paid in money or money's worth in the amount of _____

   (B)_____ The fee is computed on the fair market value of the realty which is _____.

   (C)_____ The fee is computed on the fair market value of the realty as established for property tax purposes which is _____.

5. Check YES ___ or NO ___ to the following: A lien or encumbrance existed on the land, tenement, or realty before the transfer and remained on the land, tenement, or realty after the transfer. If "YES," the amount of the outstanding balance of this lien or encumbrance is _____.

6. The deed recording fee is computed as follows:

   (A) Place the amount listed in item 4 above here: _____

   (B) Place the amount listed in item 5 above here: _____
   (If no amount is listed, place zero here.)

   (C) Subtract Line 6(b) from Line 6(a) and place the result here: _____

7. The deed recording fee is based on the amount listed on Line 6(c) above and the deed recording fee due is _____.

8. As required by Code Section '12-24-70, I state that I am a responsible person who was connected with the transaction as Division Vice President - Land Development.

9. I understand that a person required to furnish this affidavit who willfully furnishes a false or fraudulent affidavit is guilty of a misdemeanor and, upon conviction, must be fined not more than one thousand dollars or imprisoned not more than one year, or both.

Responsible Person Connected with the Transaction

Matthew Raines, Division Vice President
Print or Type Name Here

Sworn this 7 day of September 2016
Meagan Whitlow
Notary Public for South Carolina
My Commission Expires: 09-14, 2025

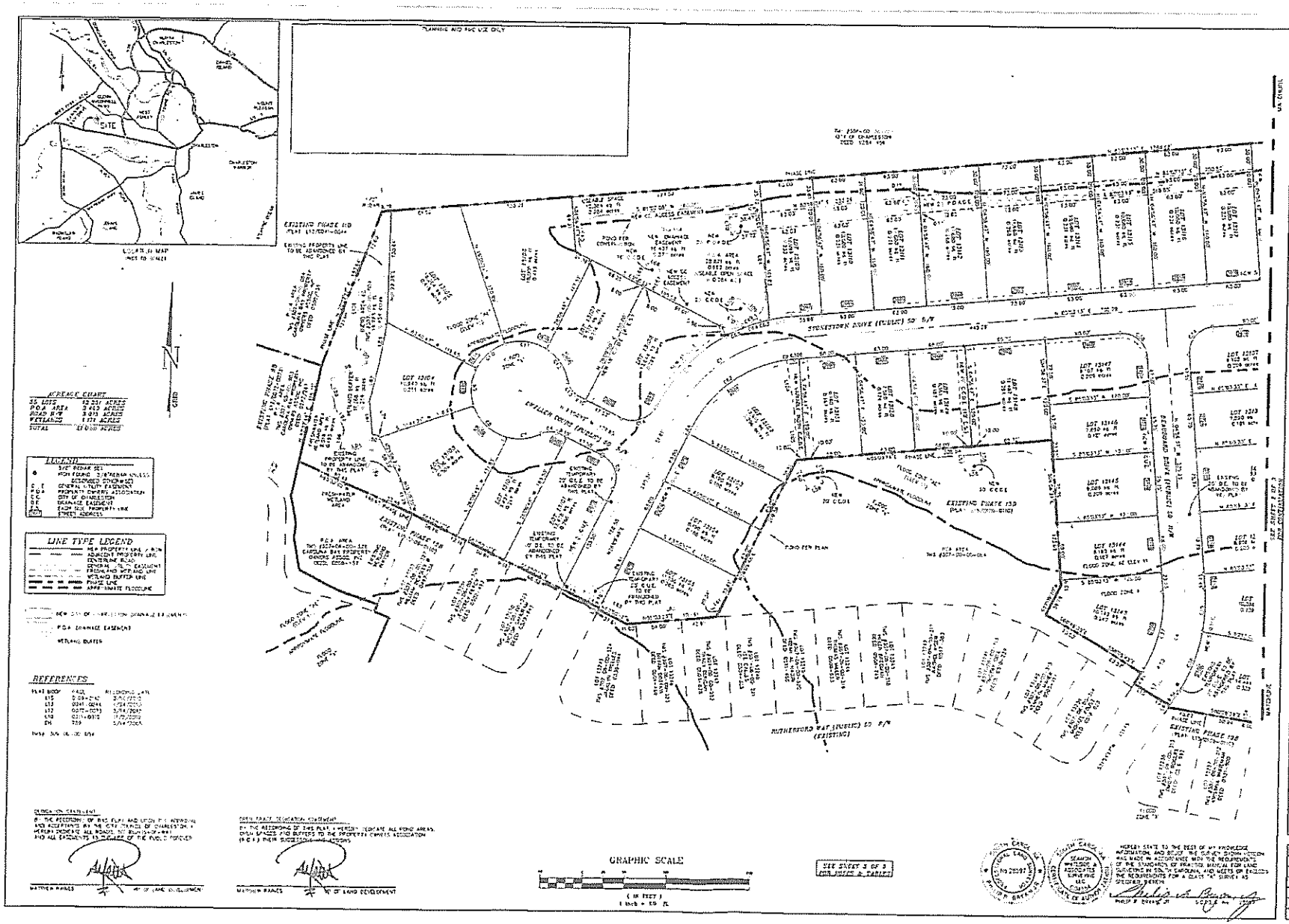
LOCATION MAP
NOT TO SCALE
SITE
ACREAGE CHART
LEGEND
LINE TYPE LEGEND
REFERENTS
STEVESTON DRIVE (PUBLIC) 50' R/W
RUTHERFORD WAY (PUBLIC) 50' R/W (EXISTING)
EXISTING PHASE 13B
EXISTING PHASE 13C
FLOOD ZONE X
GRAPHIC SCALE
SEE SHEET 3 OF 3 FOR NOTES & TABLES
1035-B Jenkins Road
Charleston, SC 29407
(843) 795-9330
A FINAL SUBDIVISION PLAT OF
CAROLINA BAY, PHASE 13A
A PORTION OF THE ESSEX FARMS PUD
OWNED BY CENTEX HOMES, A NEVADA GENERAL PARTNERSHIP
LOCATED IN THE CITY OF CHARLESTON
CHARLESTON COUNTY, SOUTH CAROLINA
DATE: 5 9 2016
DRAWN: JHB
CHECK: PRB
CC
JOB: 16207
ENG CD SAVED
SHEET 1 OF 3

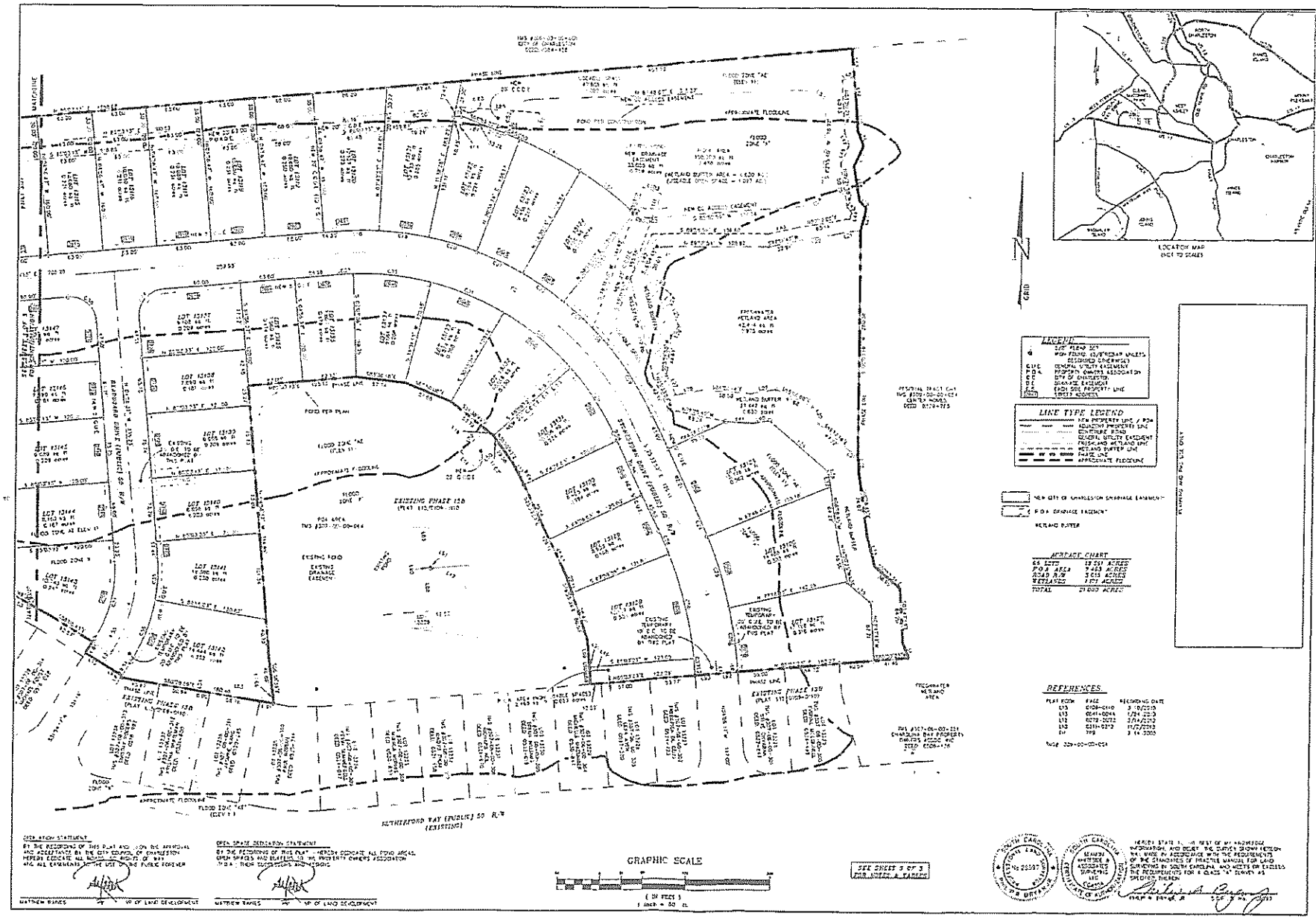

NO.	DATE	REVISIONS	BY
001	3/7/16	REVISED PER CONSTRUCTION COMMENTS	TRG
002	4/7/16	REVISED PER CITY COMMENTS	TRG
003	7/25/16	REVISED PER CITY COMMENTS	TRG
004	9/28/16	REVISED PER CITY COMMENTS	TRG

1035-B Jenkins Road
Charleston, SC 29407
(843) 795-9330
surveying LLC

A FINAL SUBDIVISION PLAT OF CAROLINA BAY, PHASE 13A

A PORTION OF THE ESSEX FARMS PUD
OWNED BY CENTEX HOMES, A NEVADA GENERAL PARTNERSHIP
LOCATED IN THE CITY OF CHARLESTON
CHARLESTON COUNTY, SOUTH CAROLINA

DATE	3-9-2016
DRAWN	JKB
CHECK	FRB
CE	
JOB	16097
DWG	C013ASUBD
SHEET	2 OF 3

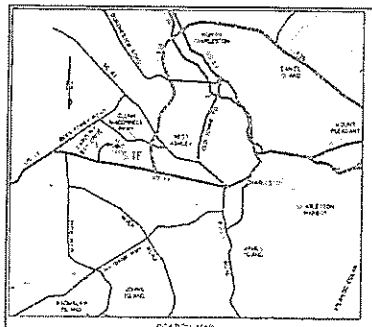

LOCATION MAP
NOT TO SCALE

NOTES

1. ANYTHING SHOWN OUTSIDE THE DEFINED BOUNDARY OF THIS PLAT IS FOR DEVELOPMENT PURPOSES ONLY.
2. THE AREA WAS DETERMINED BY THE COORDINATE METHOD
3. THE PUBLIC RECORDS REFERENCED ON THIS PLAT ARE ONLY THOSE USED AND NECESSARY FOR THE ESTABLISHMENT OF THE BOUNDARY OF THE PROPERTY SHOWN AND ARE NOT AND DO NOT CONSTITUTE A TITLE SEARCH.
4. PROPERTY IS LOCATED IN FLOOD ZONE AE (EL[illegible]) AND FLOOD ZONE X AS SCALED FROM F[illegible] PANEL NO. [illegible] DATED AND ARE APPROXIMATE ONLY. EFFECTIVE NOVEMBER 17, 2004.
5. THE PROPERTY OWNERS ASSOCIATION (POA) SHALL BE RESPONSIBLE FOR MAINTENANCE OF COMMON AREAS, PONDS, PERIMETER ISLANDS, DRAINAGE AND LANDSCAPE EASEMENTS. THE PRIVATE DRAINAGE EASEMENTS SHOWN ARE DEDICATED TO THE POA FOR ACCESS TO AND MAINTENANCE OF THE STORMWATER FACILITIES WITHIN THE PRIVATE DRAINAGE EASEMENTS.
6. ALL TREES SHOWN TO REMAIN ARE SUBJECT TO THE ZONING LAWS OF CITY OF CHARLESTON AND CANNOT BE REMOVED WITHOUT PRIOR APPROVAL OF THE ZONING ADMINISTRATOR.
7. ALL EASEMENTS ARE NEW UNLESS LABELED AS EXISTING.
8. THERE IS A 5' UTILITY EASEMENT ALONG ALL ROAD RIGHTS-OF-WAY LINES AS SHOWN. THIS EASEMENT DOES NOT ALLOW ANY CONTRACTOR OR UTILITY COMPANY TO ENTER INTO A DEDICATED TREE PROTECTION ZONE THAT FALLS WITHIN THE 5' GENERAL UTILITY EASEMENT.
9. ALL MATERIALS AND WORKMANSHIP SHALL BE IN ACCORDANCE WITH THE REQUIREMENTS OF THE CITY OF CHARLESTON ZONING AND LAND DEVELOPMENT REGULATIONS.
10. WETLANDS LINES SHOWN HEREON WERE TAKEN FROM A WETLAND SURVEY IN A PORTION OF TRACT 2 ESSEX FARMS BY DANIELS & BENNETT OF SOUTHEASTERN SURVEYORS OF CHARLESTON, INC. DATED NOVEMBER 12, 2004 & VERIFIED BY LETTER FROM CORPS DATED APRIL 7, 2005 CONTAINED BY CORPS ORDER. THE CORPS HAS JURISDICTION OVER FRESHWATER WETLANDS/WATERS.
11. WETLAND DELINEATION: AUGUST 16, 2004 SAC 81-2004-1034-3B WETLAND FORMAL DETERMINATION & JURISDICTIONAL DETERMINATION #2004-1034-1760 BY US ARMY CORPS OF ENGINEERS, VALID UNTIL SEPTEMBER 30, 2009.
12. ALL WETLAND SHOWN HEREON ARE UNDER THE JURISDICTION AND REGULATION AUTHORITY OF THE ARMY CORPS OF ENGINEERS. ANY ALTERATION OF THE WETLAND AREA MUST BE APPROVED BY THE ARMY CORPS OF ENGINEERS.
13. STOCKS OR OTHER FOR CURBS LOCATED WITH DRAINAGE, WATER, OR SEWER EASEMENTS CANNOT BE INSTALLED WITHOUT APPROVAL OF THE EASEMENT HOLDER.
14. WATER DISTRIBUTION AND SANITARY SEWER SUPPLY BY CHARLESTON WATER SYSTEMS
15. THE SMALLEST LOTS ARE LOTS 2[illegible] & 1[illegible] (7,[illegible] SQFT)
16. THE LARGEST LOT IS LOT 1[illegible] (38,344 SQFT)
17. THE TOTAL NUMBER OF LOTS IS 7[illegible]
18. CITY OF CHARLESTON DRAINAGE EASEMENTS SHOWN ARE DEDICATED TO THE CITY OF CHARLESTON FOR ACCESS TO AND MAINTENANCE OF THE STORMWATER SYSTEM
19. THE ACCESS EASEMENT SHOWN IS DEDICATED TO THE CITY OF CHARLESTON FOR ACCESS TO THE STORMWATER MANAGEMENT FACILITY. THE LOCATION MAINTENANCE AND OPERATION OF THE STORMWATER MANAGEMENT FACILITY IS THE RESPONSIBILITY OF THE OWNER(S) OF THE PARCEL(S) OR TO THE PROPERTY OWNERS ASSOCIATION (POA) AND SHALL BE COMPLETED IN ACCORDANCE WITH THE COVENANTS FOR PERMANENT MAINTENANCE OF STORMWATER FACILITIES CONTAINED FOR THIS SUBDIVISION.

DEDICATION STATEMENT

BY THE RECORDING OF THIS PLAT AND UPON THE APPROVAL AND ACCEPTANCE BY THE CITY COUNCIL OF CHARLESTON, THE HEREIN DESCRIBED AND DEDICATED PROPERTY OR PART THEREOF AND ALL EASEMENTS SHOWN ARE DEDICATED TO PUBLIC USE FOREVER.

MATTHEW RANEY — DIRECTOR OF LAND DEVELOPMENT

OPEN SPACE DEDICATION STATEMENT

BY THE RECORDING OF THIS PLAT, HEREIN DESCRIBED ALL POND AREAS, OPEN SPACES AND BUFFERS ARE DEDICATED TO THE PROPERTY OWNERS ASSOCIATION (POA) THEIR SUCCESSORS AND ASSIGNS.

MATTHEW RANEY — DIRECTOR OF LAND DEVELOPMENT

ESSEX FARMS PUD MASTER PLAN LAND USE SUMMARY			
	# UNITS	OPEN SPACE (INCLUDES POND AREA, 25' BUFFERS AND WETLANDS AREAS)	25' NON-BUFFERABLE OPEN SPACE
PER THE APPROVED ESSEX FARMS PUD MASTER PLAN	16 (SF) [illegible] (SF-DET) [illegible] (SF-A) [illegible] (MF)	[illegible] ACRES	[illegible] ACRES
PHASE 1A, 1B & 1C	[illegible] (SF-A)	[illegible] ACRES [illegible] ACRES	[illegible] ACRES
PHASE 2A	[illegible] (SF-A)	[illegible] ACRES	[illegible] ACRES
PHASE 2B	[illegible] (SF-A)	[illegible] ACRES	[illegible] ACRES
PHASE 3C1	[illegible] (SF-A)	[illegible] ACRES	[illegible] ACRES
PHASE 4A	[illegible] (SF-A)	[illegible] ACRES	[illegible] ACRES
PHASE 4B	[illegible] (SF-A)	[illegible] ACRES	[illegible] ACRES
PHASE 7A, 7B & 7C	[illegible] (SF-A)	[illegible] ACRES	[illegible] ACRES
REMAINING TO BE PLATTED/DEVELOPED	16 (SF) [illegible] (SF-A) [illegible] (SF-D) [illegible] (MF)	[illegible] ACRES REQUIREMENT: [illegible] SATISFIED	[illegible] ACRES REQUIREMENT: [illegible] SATISFIED

APPROVED PUD AMENDED BY CHARLESTON CITY COUNCIL DATED 10. 2016
SEE PUD MASTER PLAN LAND USE REQUIREMENTS
THIS PHASE 1B1 TOTAL ACR SUM 1[illegible]-[illegible] SFD

REFERENCES

MAP BOOK	PAGE	RECORDING DATE
L10	0[illegible]	3/[illegible]/2013
L11	0041	9/24/2013
L12	0073-0075	3/14/2013
L10	0[illegible]-0[illegible]	11/12/2013
C4	286	3/4/1982

TMS# 2[illegible]-00-00-[illegible]

SOUTH CAROLINA REGISTERED PROFESSIONAL ENGINEER No 28507

SOUTH CAROLINA REGISTERED PROFESSIONAL LAND SURVEYOR No 11[illegible]

I HEREBY STATE TO THE BEST OF MY KNOWLEDGE, INFORMATION AND BELIEF, THE SURVEY SHOWN HEREON WAS MADE IN ACCORDANCE WITH THE REQUIREMENTS OF THE STANDARDS OF PRACTICE MANUAL FOR LAND SURVEYING IN SOUTH CAROLINA, AND MEETS OR EXCEEDS THE REQUIREMENTS FOR A CLASS "A" SURVEY AS SPECIFIED THEREIN.

PHILIP B. BRYANT — DATE OF SURVEY [illegible]

NO.	DATE	REVISION	BY
01	7/17/16	REVISED SITE ELEMENTS, COMMENTS	PBB
02	7/21/16	REVISED PLAT COMMENTS	PBB
03	7/28/16	REVISED PER COMMENTS	PBB
04	9/19/16	REVISED PER COMMENTS	PBB
NO.	DATE	REVISION	BY

1035-B Jenkins Road
Charleston, SC 29407
(843) 795-9330
BWA surveying LLC

A FINAL SUBDIVISION PLAT OF CAROLINA BAY, PHASE 13A

A PORTION OF THE ESSEX FARMS PUD

OWNED BY CENTEX HOMES, A NEVADA GENERAL PARTNERSHIP
LOCATED IN THE CITY OF CHARLESTON
CHARLESTON COUNTY, SOUTH CAROLINA

DATE	5-9-2016
DRAWN	JHD
CHECK	PBB
CO	
JOB	16007
DWG	C013A5J00
SHEET	3 OF 3

STATE OF SOUTH CAROLINA	)	**EXCLUSIVE STORM**
	)	**WATER DRAINAGE**
	)	**EASEMENTS**
COUNTY OF CHARLESTON	)	**CITY OF CHARLESTON**

This Agreement is made and entered into this _____ day of _____20__, by and between the City of Charleston, a Municipal Corporation organized and existing pursuant to the laws of the State of South Carolina (herein the "City"), and Centex Homes, a Nevada general partnership _____ (herein the "Owner").

WHEREAS, THE CITY OF CHARLESTON, is desirous of maintaining storm water drainage ditches and appurtenances ("Storm Water System") across a portion of _____ property identified by and designated as Charleston _____County tax map number 309-00-00-054 & ** _____ and to accomplish this objective, the City must obtain certain easements from the Owner permitting the maintenance of the Storm Water System through the referenced portion of _____ the Owner's property as hereinafter described; and

**307-00-00-004

WHEREAS, the undersigned Owner of the property is desirous of cooperating with the City and is minded to grant unto it certain permanent and exclusive storm water drainage easements in and to the property necessary therefor.

NOW, THEREFORE, in consideration of the foregoing and the benefits to be derived by the drainage improvements to the property, the Owner has granted, bargained, sold, released and conveyed by these present and does grant, bargain, sell, release and convey unto the City of Charleston all of those certain New City of Charleston Drainage Easements (or D.E.) as such are identified on the above referenced portion of _____ property and which are more fully shown on that certain plat entitled;

" A FINAL SUBDIVISION PLAT OF CAROLINA BAY, PHASE 13A A PORTION OF THE ESSEX FARMS PUD OWNED BY CENTEX HOMES, A NEVADA GENERAL PARTNERSHIP LOCATED IN THE CITY OF CHARLESTON CHARLESTON COUNTY, SOUTH CAROLINA

"

Prepared and executed by Philip R. Bryan, Jr., SW+A Surveying, LLC _____ dated May 9, 2016 _____, revised on Sep 20, 2016 _____, and recorded on _____ in Plat Book _____ at Page _____ in the RMC Office for Charleston _____, South Carolina (herein the "Plat"). A copy of said plat is attached heretofore as "Exhibit A" and incorporated herein.

SAID EXCLUSIVE STORM WATER DRAINAGE EASEMENTS having such size, shape, location, and butting and bounding as shown on said Plat, reference to which is hereby made for a more complete description.

The City shall at all times have the right of ingress and egress to the land affected by the said Exclusive and Permanent Storm Water Drainage Easements for purposes of periodic inspection, maintenance, repair and replacement of the Storm Water System. These Exclusive and Permanent Storm Water Drainage Easements shall be commercial in nature and shall run with the land.

The City has no obligation to repair, replace or to compensate the Owner for trees, plants, grass, shrubs or other elements damaged or destroyed within the confines of these Exclusive and Permanent Storm Water Drainage Easements during the conduct of its allowable activities as described above.

TO HAVE AND TO HOLD, all and singular, the said before mentioned unto the said CITY OF CHARLESTON, its successors and assigns, against Owner and its heirs and assigns, and all persons whomsoever lawfully claiming or to claim the same or any part thereof.

IN WITNESS WHEREOF, the parties have set the Hands and Seals the day and year above written.

WITNESSES:

_____
Witness #1

_____
Witness #2

CITY OF CHARLESTON

_____
By: Laura Cabiness
Its: Public Service Director

STATE OF SOUTH CAROLINA)
)
COUNTY OF CHARLESTON)

ACKNOWLEDGEMENT

The foregoing instrument was acknowledged before me (the undersigned notary) by _____, the _____ of the City of Charleston, a Municipal Corporation organized and existing pursuant to the laws of the State of South Carolina, on .

Signature: _____

Print Name of Notary: _____

Notary Public for _____

My Commission Expires: _____

SEAL OF NOTARY

WITNESSES:

_____
Witness #1

_____
Witness #2

CENTEX HOMES, a Nevada General Partnership
By: Centex Real Estate Corporation
OWNER: Its: Managing General Partner

_____
Name: Matthew Raines
Division Vice President

STATE OF South Carolina)
)
COUNTY OF Charleston)

ACKNOWLEDGEMENT

The foregoing instrument was acknowledged before me (the undersigned notary) by Matthew Raines, the Division Vice President of Centex Homes, a Nevada General Partnership, on behalf of the Owner on 9/7/2016.

Signature: Meagan Whitlow

Print Name of Notary: Meagan Whitlow

Notary Public for South Carolina

My Commission Expires: 09-19-2025

SEAL OF NOTARY

J2(a)(ii

STATE OF SOUTH CAROLINA)
) TITLE TO REAL ESTATE
COUNTY OF CHARLESTON)

KNOW ALL MEN BY THESE PRESENTS, that BEAZER HOMES, LLC, A DELAWARE LIMITED LIABILITY COMPANY, SUCCESSOR BY CONVERSION TO BEAZER HOMES CORP., A TENNESSEE CORPORATION ("Grantor") in the state aforesaid, for and in consideration of the sum of ONE AND 00/100 DOLLAR ($1.00), being the true consideration to it in hand paid at and before the sealing of these presents by the CITY OF CHARLESTON, the receipt whereof is hereby acknowledged, has granted, bargained, sold and released, and by these presents does grant, bargain, sell and release unto the said CITY OF CHARLESTON ("Grantee"), its successors and assigns, forever, the following described property which is granted, bargained, sold and released for the use of the public forever:

All of the property underneath, above, and containing those certain streets, roads, drives, and cul-de-sacs situate, lying and being in the City of Charleston, County of Charleston, State of South Carolina, identified as (list street names)
Fontana Street, Tugalo Street, Timberline Drive, Harding Court, Grand Bay Lane
as shown and designated on a plat entitled
FINAL PLAT SHOWING THE ABANDONMENT OF PROPERTY LINES BETWEEN TRACT B, TMS NO. 313-00-00-056 (21.600 AC) AND TRACT C, TMS NO. 313-00-00-057 (12.102 AC) AND SHOWING THE SUBSEQUENT SUBDIVISION TO CREATE MAYBANK VILLAGE PHASE 2-B CONTAINING 100 LOTS (12.802 AC), H.O.A. AREAS (16.314 AC), AND RIGHT-OF-WAYS (4.586 AC) PROPERTY OF BEAZER HOMES, LLC LOCATED IN JOHN'S ISLAND, CITY OF CHARLESTON, CHARLESTON COUNTY, SOUTH CAROLINA
prepared by HLA, Inc.,
dated October 31, 2016, revised _____, and recorded on _____
in Plat Book _____ at Page _____ in the RMC Office for Charleston County.
Said property butting and bounding, measuring and containing, and having such courses and distances as are shown on said plat. Reference being had to the aforesaid plat for a full and complete description, being all of the said dimensions, a little more or a little less.

This being a portion of the property conveyed to Grantor herein by deed of the Tidelands Bank dated November 15, 2013 and recorded November 18, 2013 in Book 0373 at Page 811 in the RMC Office for Charleston County, South Carolina.

Grantee's Mailing Address:

City of Charleston
Department of Public Service
Engineering Division
2 George Street
Suite 2100
Charleston, South Carolina 29401

Portion of TMS No.: 313-00-00-056 & 313-00-00-057

TOGETHER with all and singular, the rights, members, hereditaments and appurtenances to the said premises belonging, or in anywise incident or appertaining.

TO HAVE AND TO HOLD, all and singular, the said premises before mentioned unto the CITY OF CHARLESTON, its successors and assigns forever.

AND Grantor does hereby bind itself and its heirs, executors and administrators, to warrant and forever defend, all and singular, the said premises unto the said City of Charleston, heirs and assigns, against Grantor and its heirs, and all persons whomsoever lawfully claiming, or to claim the same or any part thereof.

WITNESS our Hand(s) and Seal(s) this 17th day of November 20 16.

SIGNED, SEALED AND DELIVERED

IN THE PRESENCE OF:

Witness Number One

Karen S. Love
Printed Name

Witness Number Two

Stefanie Nikole Steeley
Printed Name

BEAZER HOMES, LLC

Grantor

Douglas L. Schwartz, Area President
Printed Name

****

STATE OF SOUTH CAROLINA)
)
COUNTY OF CHARLESTON)

ACKNOWLEDGEMENT

This foregoing instrument was acknowledged before me (the undersigned notary) by Douglas L. Schwartz, the Area President of Beazer Homes, LLC, a Delaware limited liability company, on behalf of the Grantor on the 17th day of November, 20 16.

Signature of Notary:

Print Name of Notary: Stefanie Nikole Steeley

Notary Public for South Carolina

My Commission Expires: 8.13.2025

STEFANIE NIKOLE STEELEY NOTARY PUBLIC Exp. August 13, 2025 SOUTH CAROLINA

SEAL OF NOTARY

STATE OF SOUTH CAROLINA)

COUNTY OF CHARLESTON) AFFIDAVIT FOR TAXABLE OR EXEMPT TRANSFERS

PERSONALLY appeared before me the undersigned, who being duly sworn, deposes and says:

1. I have read the information on this affidavit and I understand such information.

2. The property was transferred by Beazer Homes, LLC
to City of Charleston on _____.

3. Check one of the following: The deed is

(A) _____ subject to the deed recording fee as a transfer for consideration paid or to be paid in money or money's worth.

(B) _____ subject to the deed recording fee as a transfer between a corporation, a partnership, or other entity and a stockholder, partner, or owner of the entity, or is a transfer to a trust or as distribution to a trust beneficiary.

(C) ✓ exempt from the deed recording fee because (See Information section of affidavit): #2 (explanation required)
(If exempt, please skip items 4-7, and go to item 8 of this affidavit.)

If exempt under exemption #14 as described in the Information section of this affidavit, did the agent and principal relationship exist at the time of the original sale and was the purpose of this relationship to purchase the realty?
Check Yes ____ or No ____

4. Check one of the following if either item 3(a) or item 3(b) above has been checked. (See Information section of this affidavit):

(A) _____ The fee is computed on the consideration paid or to be paid in money or money's worth in the amount of _____

(B) _____ The fee is computed on the fair market value of the realty which is _____.

(C) _____ The fee is computed on the fair market value of the realty as established for property tax purposes which is _____.

5. Check YES ___ or NO ___ to the following: A lien or encumbrance existed on the land, tenement, or realty before the transfer and remained on the land, tenement, or realty after the transfer. If "YES," the amount of the outstanding balance of this lien or encumbrance is _____.

6. The deed recording fee is computed as follows:

(A) Place the amount listed in item 4 above here: _____

(B) Place the amount listed in item 5 above here: _____
(If no amount is listed, place zero here.)

(C) Subtract Line 6(b) from Line 6(a) and place the result here: _____

7. The deed recording fee is based on the amount listed on Line 6(c) above and the deed recording fee due is _____.

8. As required by Code Section 12-24-70, I state that I am a responsible person who was connected with the transaction as Grantor.

9. I understand that a person required to furnish this affidavit who willfully furnishes a false or fraudulent affidavit is guilty of a misdemeanor and, upon conviction, must be fined not more than one thousand dollars or imprisoned not more than one year, or both.

Responsible Person Connected with the Transaction

Beazer Homes, LLC by Douglas L. Schwartz, Area Pres.
Print or Type Name Here

Sworn this 17th day of November 2016
Notary Public for South Carolina
My Commission Expires: August 13, 2025

STEFANIE NIKOLE STEELEY
NOTARY
PUBLIC
Exp. August 13, 2025
SOUTH CAROLINA

NOTES

1. AREA DETERMINED BY THE COORDINATE METHOD
2. THE PROPERTY IS LOCATED IN FLOOD ZONE X AS PER MAP NUMBER 45019C0660J, COMMUNITY PANEL 455412 0660 J EFFECTIVE NOVEMBER 17, 2004
   FLOOD ZONE X HAS BEEN DETERMINED TO BE OUTSIDE THE 500-YEAR FLOODPLAIN
3. NO UNDERGROUND EXPLORATION PERFORMED FOR THIS SURVEY
4. ALL FOUND PINS ARE 5/8" REBAR UNLESS OTHERWISE NOTED
5. THE WETLANDS SHOWN WERE LOCATED BY GPA SAC 2009-554-2NY DATED MAY 8, 2009 SEE REFERENCE #7
6. WATER TO BE PROVIDED BY ST JOHN'S WATER COMPANY
   SEWER TO BE PROVIDED BY CHARLESTON WATER SYSTEM
7. BZA-SD TREE VARIANCE APPROVAL DATED JANUARY 2, 2013
8. HOA AREAS TO BE DEDICATED TO, OWNED, AND MAINTAINED BY THE NEIGHBORHOOD HOME OWNERS ASSOCIATION.
9. 5' GENERAL UTILITY EASEMENT LOCATED PARALLEL TO NEW RIGHTS OF WAY
10. THE PRIVATE DRAINAGE EASEMENTS SHOWN ARE DEDICATED TO THE H.O.A. FOR ACCESS TO AND MAINTENANCE OF THE STORMWATER FACILITIES WITHIN THE PRIVATE DRAINAGE EASEMENTS
11. THE CITY OF CHARLESTON (CoC) DRAINAGE EASEMENTS ARE DEDICATED TO THE CITY OF CHARLESTON FOR ACCESS TO AND MAINTENANCE OF THE STORMWATER SYSTEM.
12. THE ACCESS EASEMENT SHOWN IS DEDICATED TO THE CITY OF CHARLESTON FOR ACCESS TO THE STORMWATER MANAGEMENT FACILITY. THE LONG-TERM MAINTENANCE AND OPERATION OF THE STORMWATER MANAGEMENT FACILITY IS THE RESPONSIBILITY OF THE OWNER(S) OF THE PARCEL(S) OR TO THE HOME OWNERS ASSOCIATION (H.O.A.) AND SHALL BE COMPLETED IN ACCORDANCE WITH THE COVENANTS FOR PERMANENT MAINTENANCE OF STORMWATER FACILITIES COMPLETED FOR THIS SUBDIVISION.
13. TOTAL LOTS = 100
    - SMALLEST LOT = LOTS 73-75, 92-94, 98-99, 126-144, 147-149, 151-152, 156-157, 159 (5,000 SF)
    - LARGEST LOT = LOT 100 (9,634 SF)

REFERENCES

1. TMS NO. 313-00-00-056 -057.
2. PLAT BY GPA DATED SEPTEMBER 7, 2004 AND RECORDED IN PLAT BOOK EN, PAGE 503, CHARLESTON COUNTY RMC.
3. PLAT BY HGBD DATED APRIL 27, 2005 AND RECORDED IN PLAT BOOK EA, PAGE 93, CHARLESTON COUNTY RMC.
4. DEED RECORDED NOVEMBER 18, 2013 IN DEED BOOK 0373, PAGE 812 CHARLESTON COUNTY RMC.
5. PLAT BY HLA, INC. DATED AUGUST 18, 2014 AND RECORDED IN PLAT BOOK L14, PAGE 414 CHARLESTON COUNTY RMC.
6. PLAT BY HLA, INC. DATED JANUARY 15, 2016 AND RECORDED IN PLAT BOOK S16, PAGE 28, CHARLESTON COUNTY RMC.
7. PLAT BY HLA, INC. DATED APRIL 18, 2016 AND RECORDED IN PLAT BOOK L16, PAGE 259, CHARLESTON COUNTY RMC.

DEVELOPMENT SUMMARY	
PRE-SUBDIVISION:	
TMS NO. 313-00-00-056	21.600 ACRES
TMS NO. 313-00-00-057	12.102 ACRES
TOTAL	33.702 ACRES
POST-SUBDIVISION:	
100 LOTS	12.802 ACRES
H.O.A. AREAS	16.314 ACRES
RIGHT-OF-WAYS	4.586 ACRES
TOTAL	33.702 ACRES
WETLANDS:	
HOMLANDS	25.494 ACRES
WETLANDS	8.208 ACRES
TOTAL	33.702 ACRES
DENSITY:	
100 LOTS / 25.494 AC	3.92 LOTS/AC

FINAL PLAT SHOWING THE ABANDONMENT OF PROPERTY LINES BETWEEN TRACT B, TMS NO. 313-00-00-056 (21.600 AC) AND TRACT C, TMS NO. 313-00-00-057 (12.102 AC) AND SHOWING THE SUBSEQUENT SUBDIVISION TO CREATE *MAYBANK VILLAGE PHASE 2-B* CONTAINING 100 LOTS (12.802 AC), H.O.A. AREAS (16.314 AC), AND RIGHT-OF-WAYS (4.586 AC)

PROPERTY OF
BEAZER HOMES, LLC
LOCATED IN
JOHNS ISLAND, CITY OF CHARLESTON
CHARLESTON COUNTY, SOUTH CAROLINA
DATE: OCTOBER 31, 2016 SCALE: 1" = 100'

SHEET 1 OF 3

HLAINC LAND PLANNING LANDSCAPE ARCHITECTURE CIVIL ENGINEERING SURVEYING
29 Leinbach Drive, A2, Charleston SC 29407-6988
tel: 843.763.1166 fax: 843.763.1939 web: www.hlainc.com

LEGEND

- BOUNDARY LINE & CORNER FOUND (AS DESCRIBED)
- BOUNDARY LINE & CORNER SET (5/8" REBAR)
- BOUNDARY LINE & CALCULATED POINT
- BOUNDARY LINE TO BE ABANDONED
- ADJACENT BOUNDARY LINE
- RIGHT OF WAY LINE
- EASEMENT LINE (AS DESCRIBED)
- EASEMENT LINE TO BE ABANDONED
- CENTERLINE
- WETLAND LINE
- WETLAND BUFFER
- WETLAND BUFFER
- 1234 ADDRESS
- CoC CITY OF CHARLESTON
- E/S EACH SIDE
- SJWC ST JOHN'S WATER COMPANY
- CPW COMMISSIONERS OF PUBLIC WORKS

EASEMENT LINE TABLE		
LINE	BEARING	LENGTH
L30	S 45°18'22" E	25.74
L31	S 03°46'20" E	43.07
L32	S 32°41'14" E	11.56
L33	S 32°41'45" W	15.00
L34	N 32°41'14" W	14.25
L35	N 60°23'18" E	7.78
L36	N 17°40'25" E	12.22
L37	S 72°19'35" E	15.00
L38	S 17°40'25" W	12.22
L39	N 60°23'18" E	18.48
L40	S 32°41'14" E	15.00
L41	S 50°35'45" W	10.44
L42	N 32°41'11" W	10.27
L43	N 57°18'49" E	15.00
L44	S 32°41'11" E	10.27
L45	N 57°18'49" E	4.40
L46	N 46°20'14" E	15.00
L47	S 41°39'46" E	11.35
L48	S 32°41'11" E	14.84
L49	S 57°18'49" W	15.00
L50	N 32°41'11" W	14.07
L51	S 12°20'33" E	18.39
L52	S 77°39'27" W	18.00
L53	N 12°20'33" W	18.39
L54	N 21°07'25" E	73.41
L55	S 12°18'01" E	29.91
L56	S 77°41'29" W	18.00
L57	N 12°18'01" W	29.91
L58	N 88°47'47" E	84.78
L59	S 81°37'40" E	20.00
L60	S 65°22'55" E	20.00
L61	N 32°41'14" W	7.63
L62	N 50°35'45" E	22.00
L63	N 50°41'14" E	25.00
L64	S 39°24'14" E	16.00
L65	N 62°19'35" W	30.53
L66	N 50°40'25" E	16.00
L67	S 62°19'35" E	34.78
L68	S 50°03'35" E	103.61
L69	N 27°00'01" W	132.35
L70	N 57°58'57" E	20.00
L71	S 27°00'01" E	131.31
L72	N 72°19'35" W	16.00
L73	N 83°00'01" E	20.00
L74	N 46°41'11" W	20.30

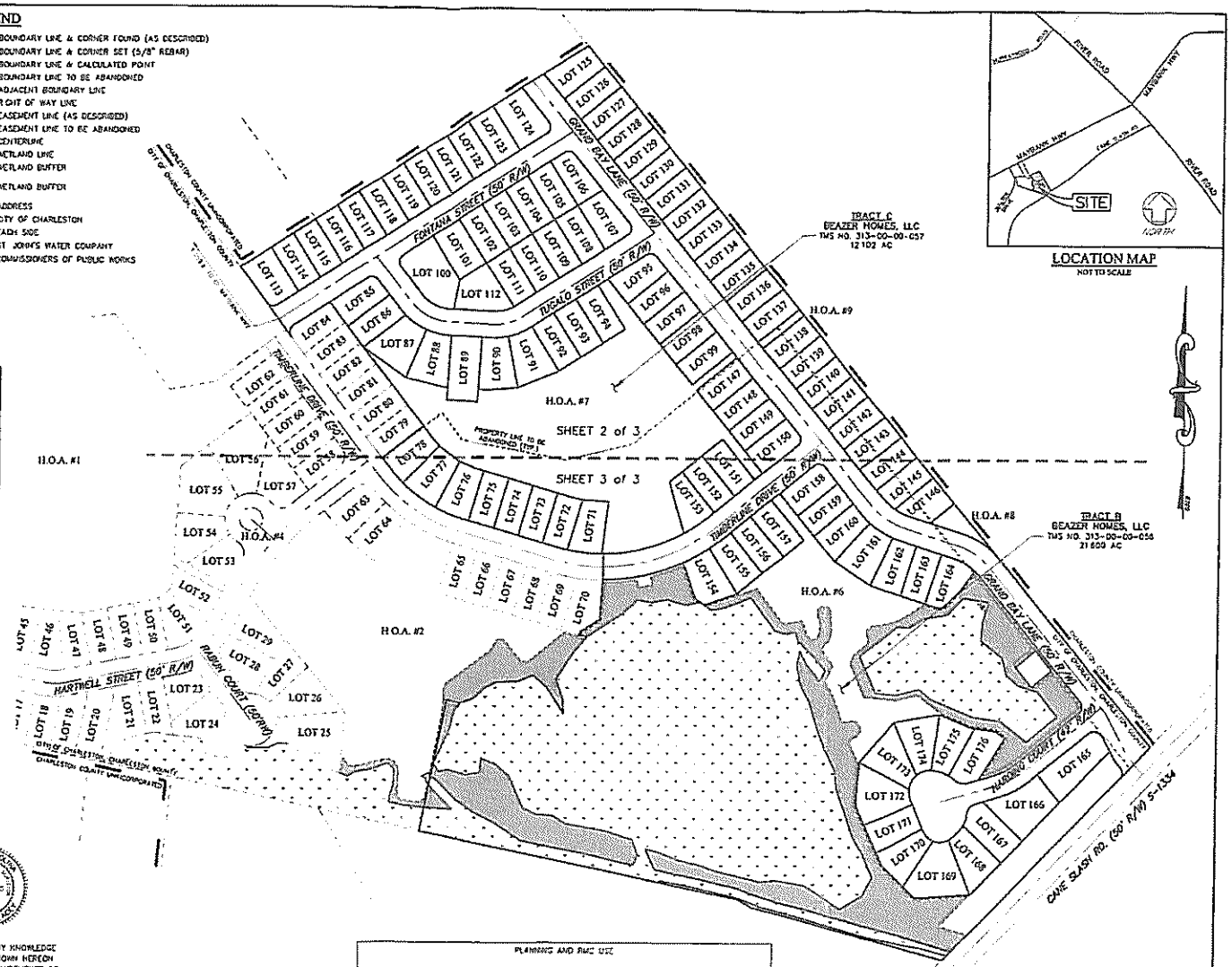

LOCATION MAP
NOT TO SCALE

I HEREBY STATE THAT TO THE BEST OF MY KNOWLEDGE INFORMATION AND BELIEF, THE SURVEY SHOWN HEREON WAS MADE IN ACCORDANCE WITH THE REQUIREMENTS OF THE MINIMUM STANDARDS FOR THE PRACTICE OF LAND SURVEYING IN THE STATE OF SOUTH CAROLINA, AND MEETS OR EXCEEDS THE REQUIREMENTS FOR A CLASS "A" SURVEY AS SPECIFIED THEREIN; ALSO THERE ARE NO VISIBLE ENCROACHMENTS OR PROJECTIONS OTHER THAN SHOWN.

RICHARD D. LACEY S.C.P.L.S. 16120

BY THE RECORDING OF THIS PLAT AND UPON THE APPROVAL AND ACCEPTANCE BY THE CITY COUNCIL OF CHARLESTON, I HEREBY DEDICATE ALL ROADS, ROAD RIGHTS-OF-WAY AND EASEMENTS TO THE USE OF THE PUBLIC FOREVER

BEAZER HOMES, LLC

PLANNING AND RMC USE

LINE TABLE		
LINE	BEARING	LENGTH
L1	S 61°27'54" E	32.91
L2	N 72°09'32" W	27.35
L3	S 39°43'19" W	27.04
L4	S 46°28'23" W	28.76
L5	S 63°33'55" W	23.87
L6	S 87°54'06" W	45.50
L7	S 82°00'04" W	35.48
L8	N 46°27'04" W	34.56
L9	N 33°54'52" W	60.36
L10	S 63°12'31" E	27.91
L11	S 27°09'45" E	58.95
L12	S 32°10'07" W	37.65
L13	S 39°14'37" W	42.84
L14	N 84°36'45" W	17.47
L15	S 38°14'37" W	11.65
L16	N 57°20'03" E	39.75
L17	S 32°53'27" E	28.80
L18	N 37°07'49" W	18.23
L19	N 50°35'45" E	50.00
L20	N 39°14'37" W	50.00
L21	S 50°35'45" W	50.00
L22	N 39°14'37" W	50.00
L23	N 39°14'37" W	44.49
L24	N 32°09'45" W	9.87
L25	N 39°14'37" W	50.00
L26	N 32°09'45" W	4.43
L27	S 44°01'44" W	17.37
L28	N 61°38'05" W	6.73
L29	N 81°26'05" W	42.92
L30	N 51°51'18" W	31.64
L31	N 39°22'43" W	8.84
L32	S 54°38'05" E	21.62
L33	N 24°07'09" W	17.35
L34	N 43°56'41" W	33.78
L35	N 60°43'54" W	29.84
L36	N 38°41'07" E	44.21
L37	N 41°43'46" W	23.23
L38	N 67°52'48" W	36.09
L39	N 78°46'48" W	23.39
L40	S 81°32'55" E	6.42
L41	N 11°28'33" E	59.80
L42	S 86°22'22" E	8.14
L43	S 86°21'50" E	17.54
L44	N 50°35'45" E	4.92

LEGEND

- BOUNDARY LINE & CORNER FOUND (AS DESCRIBED)
- BOUNDARY LINE & CORNER SET (5/8" REBAR)
- BOUNDARY LINE & CALCULATED POINT
- BOUNDARY LINE TO BE ABANDONED
- ADJACENT BOUNDARY LINE
- RIGHT OF WAY LINE
- EASEMENT LINE (AS DESCRIBED)
- EASEMENT LINE TO BE ABANDONED
- CENTERLINE
- WETLAND LINE
- WETLAND BUFFER
- WETLAND BUFFER
- 1234 ADDRESS
- CofC CITY OF CHARLESTON
- E/S EACH SIDE
- SJWC ST. JOHN'S WATER COMPANY
- CPW COMMISSIONERS OF PUBLIC WORKS

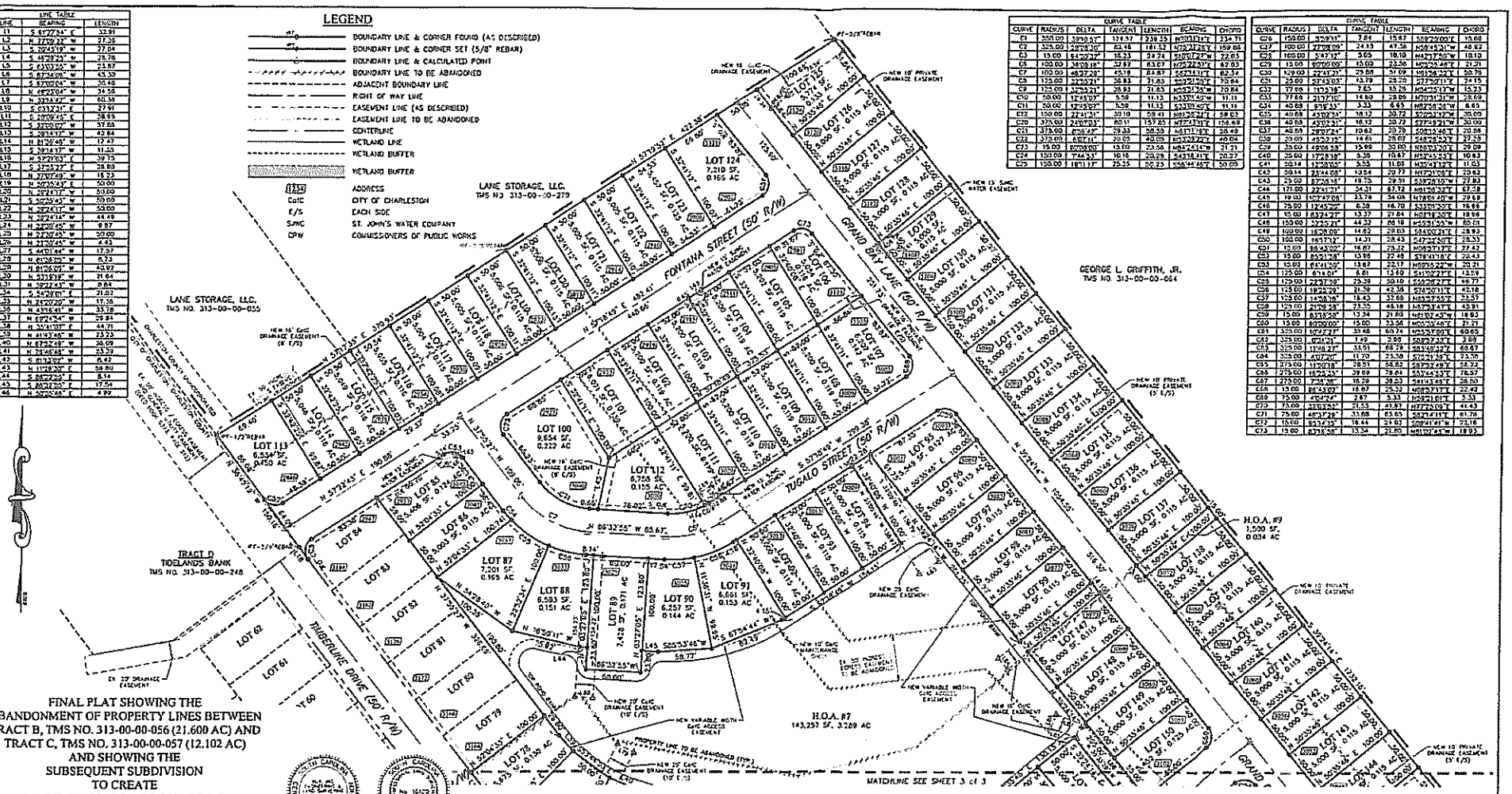

CURVE TABLE						
CURVE	RADIUS	DELTA	TANGENT	LENGTH	BEARING	CHORD
C1	350.00	38°10'37"	114.97	233.25	N55°11'51"E	231.11
C2	325.00	28°08'30"	82.45	161.52	N75°32'28"E	159.86
C3	15.00	84°30'32"	16.23	24.74	N80°07'22"W	22.63
C4	100.00	38°08'18"	32.97	63.67	N70°22'53"E	62.83
C5	100.00	49°37'28"	45.18	86.67	S62°31'11"E	82.34
C6	175.00	42°53'11"	38.93	71.63	S63°21'50"E	70.04
C7	175.00	42°53'11"	38.93	71.63	N63°21'50"W	70.04
C8	50.00	12°45'07"	5.58	11.13	N33°06'49"W	11.11
C9	50.00	12°45'07"	5.58	11.13	S33°06'49"E	11.11
C10	150.00	27°41'31"	30.10	58.41	N81°25'23"E	58.02
C11	375.00	216°03'31"	80.11	157.85	N77°41'31"E	154.69
C12	375.00	6°06'42"	20.33	38.55	S41°11'18"E	38.49
C13	375.00	6°07'11"	20.05	40.05	N53°29'22"E	40.04
C14	15.00	80°09'00"	13.69	23.56	N84°24'14"W	21.71
C24	150.00	7°44'33"	10.16	20.26	S43°18'41"E	20.27
C25	150.00	19°11'17"	25.35	50.23	S56°44'45"E	50.00

CURVE TABLE						
CURVE	RADIUS	DELTA	TANGENT	LENGTH	BEARING	CHORD
C26	150.00	3°09'31"	7.84	15.67	N52°30'00"E	15.66
C27	100.00	27°08'09"	24.33	47.38	N38°45'31"W	46.92
C28	100.00	5°47'17"	5.05	10.10	N42°17'50"W	10.10
C29	15.00	80°09'00"	15.00	23.56	N62°30'44"E	21.71
C30	109.00	22°41'31"	29.58	51.79	N61°26'23"E	50.79
C31	25.00	57°45'03"	13.79	25.20	S77°50'11"E	24.15
C32	77.00	11°23'18"	7.65	15.28	N54°25'11"W	15.25
C33	77.00	21°17'10"	14.69	28.60	N70°51'31"W	28.44
C34	40.00	9°19'33"	3.33	6.65	N62°38'24"W	6.65
C35	40.00	43°09'34"	16.12	30.12	S70°03'31"W	29.40
C36	40.00	43°02'31"	16.12	30.12	S27°03'21"W	29.00
C37	40.00	29°07'24"	10.62	20.35	S08°35'46"E	20.06
C38	25.00	45°23'15"	14.61	28.02	S45°28'52"E	27.30
C39	35.00	49°06'58"	15.98	30.00	N68°53'30"E	29.09
C40	35.00	17°28'18"	5.35	10.47	N32°43'43"E	10.43
C41	50.14	12°38'05"	5.55	11.06	N35°41'32"E	11.03
C42	50.14	23°46'08"	12.04	20.77	N17°33'07"E	20.62
C43	25.00	87°38'14"	19.75	29.91	S39°28'10"W	27.03
C44	171.00	22°41'31"	34.31	67.72	N81°06'32"E	67.28
C45	19.00	107°47'06"	23.79	34.06	N38°51'49"W	29.18
C46	23.00	41°45'22"	8.58	16.76	S33°03'30"E	16.40
C47	15.00	63°24'37"	13.37	27.84	N02°18'20"E	19.96
C48	150.00	32°30'21"	44.32	88.18	N55°51'55"W	87.01
C49	100.00	16°28'00"	14.62	28.03	S64°09'31"E	28.93
C50	100.00	18°07'31"	14.31	28.43	S47°27'50"E	28.31
C51	15.00	88°25'00"	16.87	23.27	N08°37'17"E	21.47
C52	15.00	85°31'58"	13.96	22.48	S79°41'16"E	20.43
C53	15.00	64°41'59"	13.87	23.17	N08°15'22"W	22.21
C54	125.00	6°11'01"	6.81	13.50	S41°02'27"E	13.51
C55	125.00	22°37'30"	25.29	50.10	S55°08'27"E	49.77
C56	125.00	19°36'29"	21.39	42.38	S76°07'11"E	42.18
C57	125.00	14°58'16"	16.45	32.66	N85°27'55"E	32.57
C58	125.00	21°26'28"	23.55	46.78	N43°21'47"E	45.93
C59	15.00	83°18'58"	13.34	21.80	N61°02'43"W	19.93
C60	15.00	80°09'00"	15.00	23.56	N62°30'44"E	21.71
C61	325.00	10°07'27"	29.48	60.74	N55°57'00"E	60.65
C62	325.00	2°24'24"	7.49	14.98	S08°27'43"E	14.97
C63	325.00	12°00'21"	34.91	68.19	S14°08'27"E	68.07
C64	325.00	4°07'40"	11.79	23.38	S21°21'38"E	23.38
C65	275.00	13°06'18"	28.91	56.62	S27°27'49"E	56.49
C66	275.00	16°23'33"	39.69	78.64	S32°44'53"E	78.37
C67	275.00	7°36'06"	18.29	36.83	S41°43'48"E	36.81
C68	15.00	84°43'07"	16.87	22.32	N08°37'17"E	22.42
C69	75.00	4°04'24"	2.67	5.33	N08°31'01"E	5.33
C70	75.00	33°33'32"	21.53	43.92	N17°03'08"E	43.43
C71	75.00	46°37'29"	33.68	63.65	S24°41'11"E	61.78
C72	15.00	83°34'15"	14.44	21.93	S09°41'41"W	20.16
C73	15.00	83°18'58"	13.34	21.80	N61°02'43"W	19.93

FINAL PLAT SHOWING THE ABANDONMENT OF PROPERTY LINES BETWEEN TRACT B, TMS NO. 313-00-00-056 (21.600 AC) AND TRACT C, TMS NO. 313-00-00-057 (12.102 AC) AND SHOWING THE SUBSEQUENT SUBDIVISION TO CREATE *MAYBANK VILLAGE PHASE 2-B* CONTAINING 100 LOTS (12.802 AC), H.O.A. AREAS (16.314 AC), AND RIGHT-OF-WAYS (4.586 AC)

PROPERTY OF
BEAZER HOMES, LLC
LOCATED IN
JOHNS ISLAND, CITY OF CHARLESTON
CHARLESTON COUNTY, SOUTH CAROLINA
DATE: OCTOBER 31, 2016 SCALE: 1" = 50'

SHEET 2 OF 3

HLA INC
LAND PLANNING LANDSCAPE ARCHITECTURE
CIVIL ENGINEERING SURVEYING
29 Leinbach Drive, Ai. Charleston SC 29407-6988
tel. 843.763.1166 fax: 843.763.1909 web: www.hlainc.com

I HEREBY STATE THAT TO THE BEST OF MY KNOWLEDGE INFORMATION AND BELIEF, THE SURVEY SHOWN HEREON WAS MADE IN ACCORDANCE WITH THE REQUIREMENTS OF THE MINIMUM STANDARDS FOR THE PRACTICE OF LAND SURVEYING IN THE STATE OF SOUTH CAROLINA, AND MEETS OR EXCEEDS THE REQUIREMENTS FOR A CLASS "A" SURVEY AS SPECIFIED THEREIN; ALSO THERE ARE NO VISIBLE ENCROACHMENTS OR PROJECTIONS OTHER THAN SHOWN.

RICHARD D. LACEY S.C.P.L.S. 16123

GRAPHIC SCALE

(IN FEET)
1 inch = 50 ft.

BY THE RECORDING OF THIS PLAT AND UPON THE APPROVAL AND ACCEPTANCE BY THE CITY COUNCIL OF CHARLESTON, I HEREBY DEDICATE ALL ROADS, ROAD RIGHTS-OF-WAY AND EASEMENTS TO THE USE OF THE PUBLIC FOREVER

BEAZER HOMES, LLC

PLANNING AND RMC USE

DEVELOPMENT SUMMARY	
PRE-SUBDIVISION:	
TMS NO. 313-00-00-056	21.600 ACRES
TMS NO. 313-00-00-057	12.102 ACRES
TOTAL	33.702 ACRES
POST-SUBDIVISION:	
100 LOTS	12.802 ACRES
H.O.A. AREAS	16.314 ACRES
RIGHT-OF-WAYS	4.586 ACRES
TOTAL	33.702 ACRES
WETLANDS:	
HIGHLANDS	25.494 ACRES
WETLANDS	8.208 ACRES
TOTAL	33.702 ACRES
DENSITY:	
100 LOTS / 25.494 AC	3.92 LOTS/AC

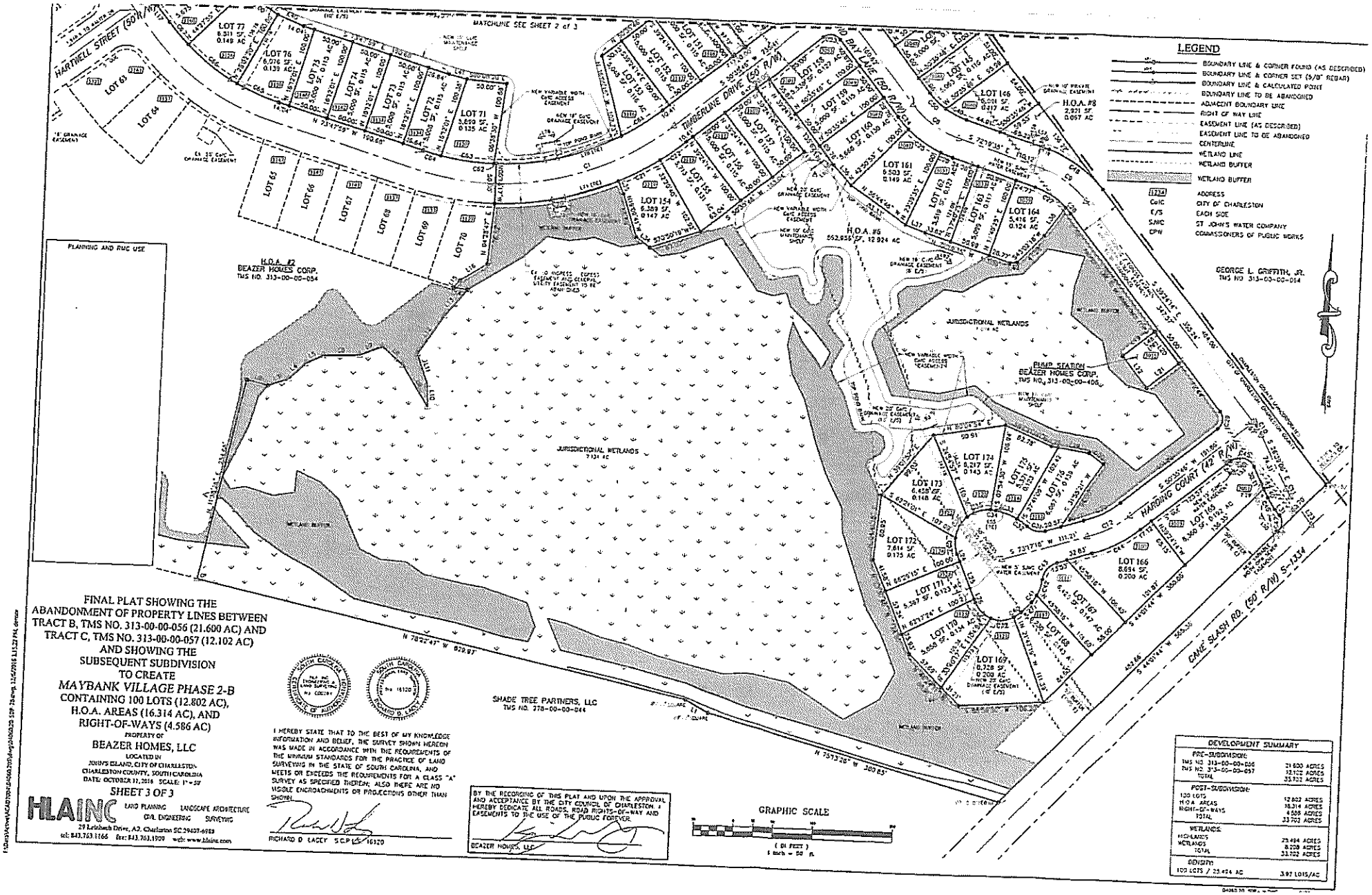

FINAL PLAT SHOWING THE ABANDONMENT OF PROPERTY LINES BETWEEN TRACT B, TMS NO. 313-00-00-056 (21.600 AC) AND TRACT C, TMS NO. 313-00-00-057 (12.102 AC) AND SHOWING THE SUBSEQUENT SUBDIVISION TO CREATE

MAYBANK VILLAGE PHASE 2-B

CONTAINING 100 LOTS (12.802 AC), H.O.A. AREAS (16.314 AC), AND RIGHT-OF-WAYS (4.586 AC)

PROPERTY OF

BEAZER HOMES, LLC

LOCATED IN

JOHNS ISLAND, CITY OF CHARLESTON
CHARLESTON COUNTY, SOUTH CAROLINA

DATE: OCTOBER 11, 2016 SCALE: 1" = 50'

SHEET 3 OF 3

HLAINC LAND PLANNING LANDSCAPE ARCHITECTURE CIVIL ENGINEERING SURVEYING

29 Leinbach Drive, A2, Charleston SC 29407-6989
tel: 843.763.1166 fax: 843.763.1909 web: www.hlainc.com

I HEREBY STATE THAT TO THE BEST OF MY KNOWLEDGE INFORMATION AND BELIEF, THE SURVEY SHOWN HEREON WAS MADE IN ACCORDANCE WITH THE REQUIREMENTS OF THE MINIMUM STANDARDS FOR THE PRACTICE OF LAND SURVEYING IN THE STATE OF SOUTH CAROLINA, AND MEETS OR EXCEEDS THE REQUIREMENTS FOR A CLASS "A" SURVEY AS SPECIFIED THEREIN; ALSO THERE ARE NO VISIBLE ENCROACHMENTS OR PROJECTIONS OTHER THAN SHOWN.

RICHARD D. EAGEY S.C.P.L. 16120

BY THE RECORDING OF THIS PLAT AND UPON THE APPROVAL AND ACCEPTANCE BY THE CITY COUNCIL OF CHARLESTON, I HEREBY DEDICATE ALL ROADS, ROAD RIGHTS-OF-WAY AND EASEMENTS TO THE USE OF THE PUBLIC FOREVER.

BEAZER HOMES, LLC

DEVELOPMENT SUMMARY	
PRE-SUBDIVISION:	
TMS NO. 313-00-00-056	21.600 ACRES
TMS NO. 313-00-00-057	12.102 ACRES
TOTAL	33.702 ACRES
POST-SUBDIVISION:	
100 LOTS	12.802 ACRES
H.O.A. AREAS	16.314 ACRES
RIGHT-OF-WAYS	4.586 ACRES
TOTAL	33.702 ACRES
WETLANDS:	
HIGHLANDS	25.494 ACRES
WETLANDS	8.208 ACRES
TOTAL	33.702 ACRES
DENSITY:	
100 LOTS / 25.494 AC	3.97 LOTS/AC

STATE OF SOUTH CAROLINA	)	**EXCLUSIVE STORM**
	)	**WATER DRAINAGE**
	)	**EASEMENTS**
COUNTY OF CHARLESTON	)	**CITY OF CHARLESTON**

This Agreement is made and entered into this _____ day of_____20__. by and between the City of Charleston, a Municipal Corporation organized and existing pursuant to the laws of the State of South Carolina (herein the "City"). and BEAZER HOMES. LLC. A DELAWARE LIMITED LIABILITY COMPANY. SUCCESSOR BY CONVERSION TO BEAZER HOMES CORP.. A TENNESSEE CORPORATION (herein the "Owner").

WHEREAS, THE CITY OF CHARLESTON. is desirous of maintaining storm water drainage ditches and appurtenances ("Storm Water System") across a portion of property identified by and designated as Charleston County tax map number 313-00-00-056 & -057 and to accomplish this objective. the City must obtain certain easements from the Owner permitting the maintenance of the Storm Water System through the referenced portion of the Owner's property as hereinafter described; and

WHEREAS, the undersigned Owner of the property is desirous of cooperating with the City and is minded to grant unto it certain permanent and exclusive storm water drainage easements in and to the property necessary therefor.

NOW, THEREFORE, in consideration of the foregoing and the benefits to be derived by the drainage improvements to the property, the Owner has granted, bargained. sold. released and conveyed by these present and does grant, bargain, sell. release and convey unto the City of Charleston all of those certain New City of Charleston Drainage Easements (or D.E.) as such are identified on the above referenced portion of property and which are more fully shown on that certain plat entitled:

"FINAL PLAT SHOWING THE ABANDONMENT OF PROPERTY LINES BETWEEN TRACT B. TMS NO. 313-00-00-056 (21.600 AC) AND TRACT C. TMS NO. 313-00-0-057 (12.102 AC) AND SHOWING THE SUBSEQUENT SUBDIVISION TO CREATE MAYBANK VILLAGE PHASE 2-B CONTAINING 100 LOTS (12.802 AC). H.O.A. AREAS (16.314 AC). AND RIGHT-OF-WAYS (4.586 AC) PROPERTY OF BEAZER HOMES. LLC. LOCATED IN JOHN'S ISLAND. CITY OF CHARLESTON, CHARLESTON COUNTY, SOUTH CAROLINA"

Prepared and executed by HLA. Inc. dated October 31. 2016 . revised on_____. and recorded on_____in Plat Book_____at Page_____in the RMC Office for Charleston . South Carolina (herein the "Plat").

A copy of said plat is attached heretofore as "Exhibit A" and incorporated herein.

SAID EXCLUSIVE STORM WATER DRAINAGE EASEMENTS having such size. shape. location. and butting and bounding as shown on said Plat, reference to which is hereby made for a more complete description.

The City shall at all times have the right of ingress and egress to the land affected by the said Exclusive and Permanent Storm Water Drainage Easements for purposes of periodic inspection. maintenance. repair and replacement of the Storm Water System. These Exclusive and Permanent Storm Water Drainage Easements shall be commercial in nature and shall run with the land.

The City has no obligation to repair, replace or to compensate the Owner for trees, plants, grass, shrubs or other elements damaged or destroyed within the confines of these Exclusive and Permanent Storm Water Drainage Easements during the conduct of its allowable activities as described above.

TO HAVE AND TO HOLD, all and singular. the said before mentioned unto the said CITY OF CHARLESTON, its successors and assigns, against Owner and its heirs and assigns. and all persons whomsoever lawfully claiming or to claim the same or any part thereof.

IN WITNESS WHEREOF, the parties have set the Hands and Seals the day and year above written.

WITNESSES:

_____
Witness #1

_____
Witness #2

CITY OF CHARLESTON

_____
By: Laura Cabiness
Its: Public Service Director

STATE OF SOUTH CAROLINA)
)
COUNTY OF CHARLESTON)

ACKNOWLEDGEMENT

The foregoing instrument was acknowledged before me (the undersigned notary) by _____, the _____ of the City of Charleston, a Municipal Corporation organized and existing pursuant to the laws of the State of South Carolina, on _____.

Signature: _____

Print Name of Notary: _____

Notary Public for _____

My Commission Expires: _____

SEAL OF NOTARY

WITNESSES:

Witness #1 Karen S Love

Witness #2 Stefanie Nikole Steeley

OWNER: Beazer Homes, LLC

Name: Douglas L. Schwartz
Its: Area President

STATE OF South Carolina)
)
COUNTY OF Charleston)

ACKNOWLEDGEMENT

The foregoing instrument was acknowledged before me (the undersigned notary) by Douglas L. Schwartz, the Area President of Beazer Homes LLC, a Delaware limited liability company, on behalf of the Owner on November 12, 2016.

Signature: Stefanie N. Steeley

Print Name of Notary: Stefanie Nikole Steeley

Notary Public for South Carolina

My Commission Expires: 8. 13. 2025

SEAL OF NOTARY

STEFANIE NIKOLE STEELEY
NOTARY PUBLIC
Exp. August 13, 2025
SOUTH CAROLINA

EXHIBIT "A"

NOTES

1. AREA DETERMINED BY THE COORDINATE METHOD.
2. THE PROPERTY IS LOCATED IN FLOOD ZONE X AS PER MAP NUMBER 45019C0401J COMMUNITY PANEL 455412 0401 J EFFECTIVE NOVEMBER 17, 2004
   FLOOD ZONE X HAS BEEN DETERMINED TO BE OUTSIDE THE 500-YEAR FLOODPLAIN
3. NO UNDERGROUND EXPLORATION PERFORMED FOR THIS SURVEY
4. ALL FOUND PINS ARE 5/8" REBAR UNLESS OTHERWISE NOTED
5. THE WETLANDS SHOWN HERE LOCATED BY OPA, SAC 2009-554-2MY DATED MAY 8, 2008 SEE REFERENCE #2
6. WATER TO BE PROVIDED BY ST. JOHN'S WATER COMPANY SEWER TO BE PROVIDED BY CHARLESTON WATER SYSTEM.
7. BZA-22 TREE VARIANCE APPROVAL DATED JANUARY 2, 2013
8. HOA AREAS TO BE DEDICATED TO, OWNED, AND MAINTAINED BY THE NEIGHBORHOOD HOME OWNERS ASSOCIATION.
9. 5' GENERAL UTILITY EASEMENT LOCATED PARALLEL TO NEW RIGHTS OF WAY
10. THE PRIVATE DRAINAGE EASEMENTS SHOWN ARE DEDICATED TO THE H.O.A. FOR ACCESS TO AND MAINTENANCE OF THE STORMWATER FACILITIES WITHIN THE PRIVATE DRAINAGE EASEMENTS
11. THE CITY OF CHARLESTON (CoC) DRAINAGE EASEMENTS ARE DEDICATED TO THE CITY OF CHARLESTON FOR ACCESS TO AND MAINTENANCE OF THE STORMWATER SYSTEM.
12. THE ACCESS EASEMENT SHOWN IS DEDICATED TO THE CITY OF CHARLESTON FOR ACCESS TO THE STORMWATER MANAGEMENT FACILITY. THE LONG-TERM MAINTENANCE AND OPERATION OF THE STORMWATER MANAGEMENT FACILITY IS THE RESPONSIBILITY OF THE OWNER(S) OF THE PARCEL(S) OR TO THE HOME OWNERS ASSOCIATION (H.O.A.) AND SHALL BE COMPLETED IN ACCORDANCE WITH THE COVENANTS FOR PERMANENT MAINTENANCE OF STORMWATER FACILITIES COMPLETED FOR THIS SUBDIVISION
13. TOTAL LOTS = 100
    - SMALLEST LOT = LOTS 73-75, 93-96, 98-99, 126-144, 147-149, 151-152, 158-167, 168 (5,000 SF)
    - LARGEST LOT = LOT 100 (9,634 SF)

REFERENCES

1. TMS NO. 313-00-00-056, -057
2. PLAT BY OPA DATED SEPTEMBER 7, 2004 AND RECORDED IN PLAT BOOK EH, PAGE 509 CHARLESTON COUNTY RMC.
3. PLAT BY HCBB DATED APRIL 27, 2005 AND RECORDED IN PLAT BOOK EA PAGE 83 CHARLESTON COUNTY RMC.
4. DEED RECORDED NOVEMBER 18, 2013 IN DEED BOOK 0373, PAGE 812 CHARLESTON COUNTY RMC
5. PLAT BY HLA, INC. DATED AUGUST 18, 2014 AND RECORDED IN PLAT BOOK EW, PAGE 416, CHARLESTON COUNTY RMC
6. PLAT BY HLA, INC. DATED JANUARY 13, 2016 AND RECORDED IN PLAT BOOK EW, PAGE 28, CHARLESTON COUNTY RMC.
7. PLAT BY HLA, INC. DATED APRIL 18, 2016 AND RECORDED IN PLAT BOOK EW, PAGE 259 CHARLESTON COUNTY RMC

LEGEND

- BOUNDARY LINE & CORNER FOUND (AS DESCRIBED)
- BOUNDARY LINE & CORNER SET (5/8" REBAR)
- BOUNDARY LINE & CALCULATED POINT
- BOUNDARY LINE TO BE ABANDONED
- ADJACENT BOUNDARY LINE
- RIGHT OF WAY LINE
- EASEMENT LINE (AS DESCRIBED)
- EASEMENT LINE TO BE ABANDONED
- CENTERLINE
- WETLAND LINE
- WETLAND BUFFER
- WETLAND BUFFER
- ADDRESS
- CoC — CITY OF CHARLESTON
- E/S — EACH SIDE
- SJWC — ST. JOHN'S WATER COMPANY
- CPW — COMMISSIONERS OF PUBLIC WORKS

DEVELOPMENT SUMMARY	
PRE-SUBDIVISION	
TMS NO. 313-00-00-056	21.600 ACRES
TMS NO. 313-00-00-057	12.102 ACRES
TOTAL	33.702 ACRES
POST-SUBDIVISION	
100 LOTS	12.802 ACRES
H.O.A. AREAS	16.314 ACRES
RIGHT-OF-WAYS	4.586 ACRES
TOTAL	33.702 ACRES
WETLANDS:	
HIGHLANDS	25.494 ACRES
WETLANDS	8.208 ACRES
TOTAL	33.702 ACRES
DENSITY	
100 LOTS / 25.494 AC	3.92 LOTS/AC

EASEMENT LINE TABLE		
LINE	BEARING	LENGTH
L152	S 65°15'22" E	57.72
L153	S 62°46'36" E	43.02
L154	S 39°21'16" E	17.36
L155	S 00°35'15" W	23.05
L156	S 39°21'16" E	14.15
L157	N 45°03'31" E	7.79
L158	N 12°42'26" E	15.32
L159	S 77°57'25" E	15.00
L160	S 12°42'26" E	17.22
L161	N 50°35'46" E	19.48
L162	S 39°21'16" E	15.00
L163	N 50°35'46" E	15.00
L164	S 39°21'16" E	19.46
L165	N 50°35'46" E	16.97
L166	N 45°03'31" E	15.00
L167	N 45°03'31" E	4.48
L168	N 45°03'31" E	15.00
L169	S 45°03'31" W	11.13
L170	S 39°21'16" E	14.84
L171	S 50°35'46" W	5.00
L172	N 39°21'16" W	14.87
L173	S 12°42'26" E	16.39
L174	S 39°21'16" E	18.00
L175	S 12°42'26" E	18.30
L176	N 77°57'25" W	30.49
L177	N 12°42'26" W	29.91
L178	N 50°35'46" E	84.79
L179	S 61°37'46" E	20.00
L180	S 39°21'16" E	20.00
L181	N 39°21'16" W	7.61
L182	S 50°35'46" E	72.00
L183	N 50°35'46" E	20.00
L184	S 39°21'16" E	18.00
L185	N 50°35'46" E	30.51
L186	S 39°21'16" E	18.00
L187	S 50°35'46" E	24.79
L188	S 39°21'16" E	107.87
L189	N 50°35'46" E	132.35
L190	S 50°35'46" E	20.00
L191	S 39°21'16" E	131.51
L192	N 39°21'16" W	18.00
L193	N 50°35'46" E	30.00
L194	N 39°21'16" W	20.00

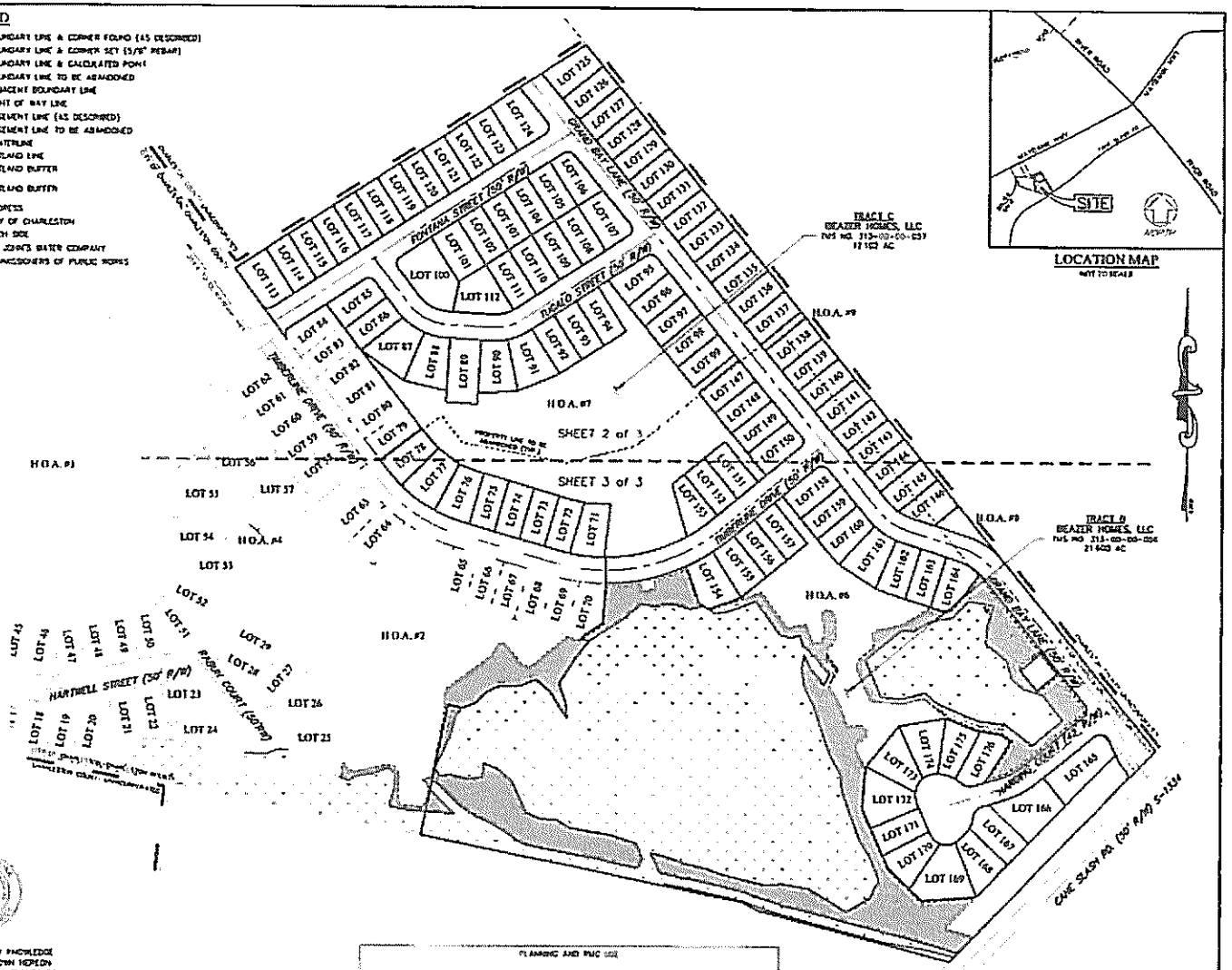

FINAL PLAT SHOWING THE ABANDONMENT OF PROPERTY LINES BETWEEN TRACT B, TMS NO. 313-00-00-056 (21.600 AC) AND TRACT C, TMS NO. 313-00-00-057 (12.102 AC) AND SHOWING THE SUBSEQUENT SUBDIVISION TO CREATE

MAYBANK VILLAGE PHASE 2-B

CONTAINING 100 LOTS (12.802 AC), H.O.A. AREAS (16.314 AC), AND RIGHT-OF-WAYS (4.586 AC)

PROPERTY OF
BEAZER HOMES, LLC

LOCATION
JOHNS ISLAND, CITY OF CHARLESTON
CHARLESTON COUNTY, SOUTH CAROLINA

DATE: OCTOBER 31, 2016 SCALE: 1" = 100'

SHEET 1 OF 3

HLAINC
LAND PLANNING | LANDSCAPE ARCHITECTURE
CIVIL ENGINEERING | SURVEYING
29 Leonard Drive, A2, Charleston SC 29407-4404
tel: 843.763.1164 fax: 843.763.1899 web: www.hlainc.com

I HEREBY STATE THAT TO THE BEST OF MY KNOWLEDGE INFORMATION AND BELIEF, THE SURVEY SHOWN HEREON WAS MADE IN ACCORDANCE WITH THE REQUIREMENTS OF THE MINIMUM STANDARDS FOR THE PRACTICE OF LAND SURVEYING IN THE STATE OF SOUTH CAROLINA, AND MEETS OR EXCEEDS THE REQUIREMENTS FOR A CLASS "A" SURVEY AS SPECIFIED THEREIN. ALSO THERE ARE NO VISIBLE ENCROACHMENTS OR PROJECTIONS OTHER THAN SHOWN.

RICHARD D. GANEY S.C.R.L.S. 18120

BY THE RECORDING OF THIS PLAT AND UPON THE APPROVAL AND ACCEPTANCE BY THE CITY COUNCIL OF CHARLESTON, I HEREBY DEDICATE ALL ROADS, ROAD RIGHTS-OF-WAY AND EASEMENTS TO THE USE OF THE PUBLIC FOREVER.

BEAZER HOMES, LLC

PLANNING AND RMC USE

EXHIBIT "A"

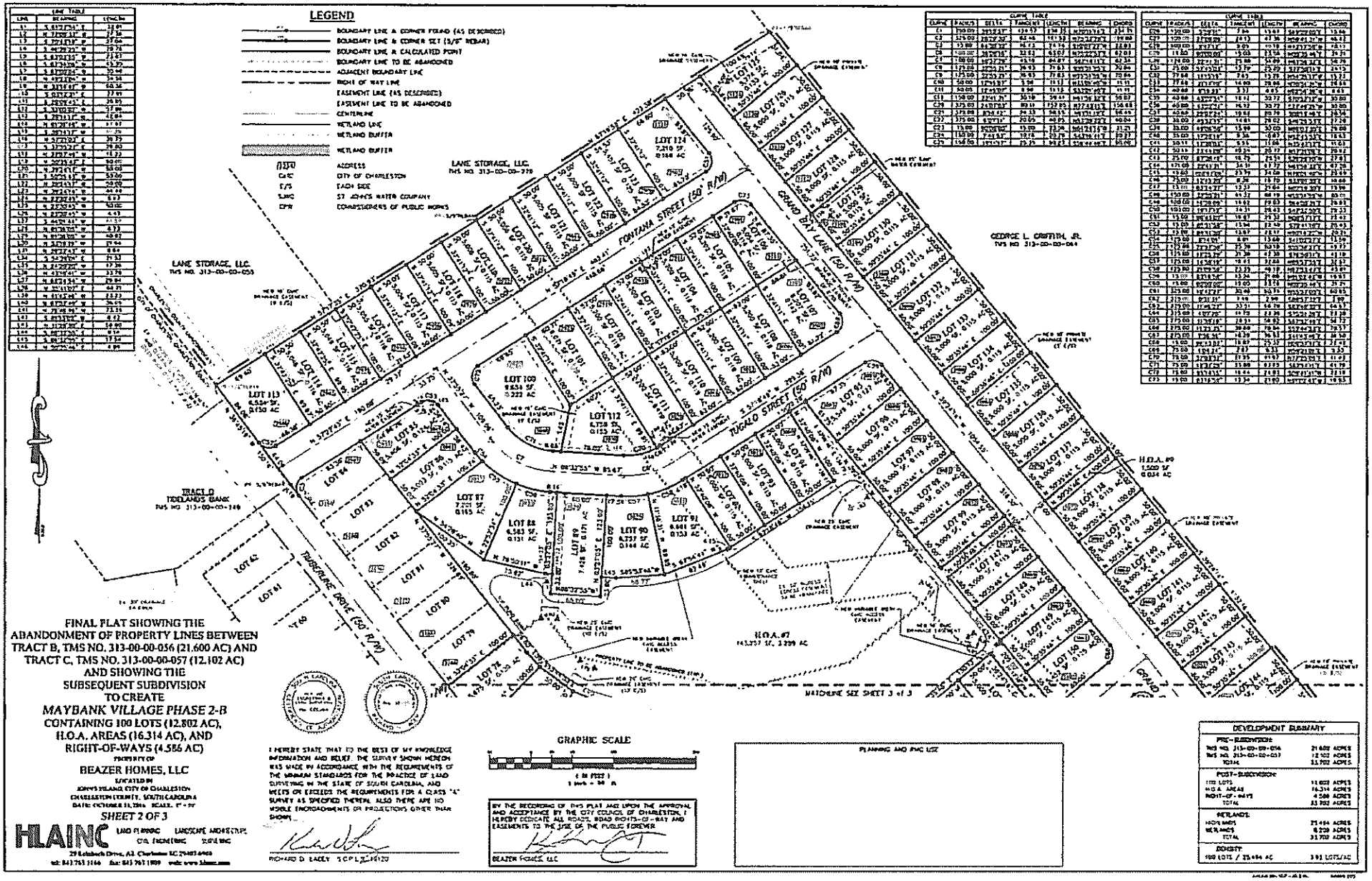
LEGEND
BOUNDARY LINE & CORNER FOUND (AS DESCRIBED)
BOUNDARY LINE & CORNER SET (5/8" REBAR)
BOUNDARY LINE & CALCULATED POINT
BOUNDARY LINE TO BE ABANDONED
ADJACENT BOUNDARY LINE
RIGHT OF WAY LINE
EASEMENT LINE (AS DESCRIBED)
EASEMENT LINE TO BE ABANDONED
CENTERLINE
WETLAND LINE
WETLAND BUFFER
WETLAND BUFFER
ADDRESS
COC CITY OF CHARLESTON
E/S EACH SIDE
SJWC ST JOHNS WATER COMPANY
CPW COMMISSIONERS OF PUBLIC WORKS
LANE STORAGE, LLC.
TMS NO. 313-00-00-056
LANE STORAGE, LLC.
TMS NO. 313-00-00-070
GEORGE L. GRIFFITH, JR.
TMS NO. 313-00-00-064
FONTANA STREET (50' R/W)
GRAND BAY LANE (50' R/W)
TUGALO STREET (50' R/W)
TUSKERINE DRIVE (50' R/W)
TRACT D
TIDELANDS BANK
TMS NO. 313-00-00-049
H.O.A. #7
143,757 SF, 3.299 AC
H.O.A. #9
1,500 SF
0.034 AC
LOT 113
LOT 112
LOT 124
LOT 87
LOT 88
LOT 89
LOT 90
LOT 91
MATCHLINE SEE SHEET 3 of 3
FINAL PLAT SHOWING THE
ABANDONMENT OF PROPERTY LINES BETWEEN
TRACT B, TMS NO. 313-00-00-056 (21.600 AC) AND
TRACT C, TMS NO. 313-00-00-057 (12.102 AC)
AND SHOWING THE
SUBSEQUENT SUBDIVISION
TO CREATE
MAYBANK VILLAGE PHASE 2-B
CONTAINING 100 LOTS (12.802 AC),
H.O.A. AREAS (16.314 AC), AND
RIGHT-OF-WAYS (4.586 AC)
PROPERTY OF
BEAZER HOMES, LLC
LOCATED IN
JOHNS ISLAND, CITY OF CHARLESTON
CHARLESTON COUNTY, SOUTH CAROLINA
DATE: OCTOBER 11, 2016 SCALE: 1" = 50'
SHEET 2 OF 3
HLA INC
LAND PLANNING LANDSCAPE ARCHITECTURE
CIVIL ENGINEERING SURVEYING
29 Leinbach Drive, Ste. A3 Charleston SC 29407-6460
tel: 843 763 3166 fax: 843 763 1809 web: www.hlainc.com
I HEREBY STATE THAT TO THE BEST OF MY KNOWLEDGE INFORMATION AND BELIEF, THE SURVEY SHOWN HEREON WAS MADE IN ACCORDANCE WITH THE REQUIREMENTS OF THE MINIMUM STANDARDS FOR THE PRACTICE OF LAND SURVEYING IN THE STATE OF SOUTH CAROLINA, AND MEETS OR EXCEEDS THE REQUIREMENTS FOR A CLASS "A" SURVEY AS SPECIFIED THEREIN. ALSO THERE ARE NO VISIBLE ENCROACHMENTS OR PROJECTIONS OTHER THAN SHOWN.
RICHARD D. EADEY S.C.P.L.S. #14120
GRAPHIC SCALE
(IN FEET)
1 inch = 50 ft.
BY THE RECORDING OF THIS PLAT AND UPON THE APPROVAL AND ACCEPTANCE BY THE CITY COUNCIL OF CHARLESTON, I HEREBY DEDICATE ALL ROADS, ROAD RIGHTS-OF-WAY AND EASEMENTS TO THE USE OF THE PUBLIC FOREVER.
BEAZER HOMES, LLC
PLANNING AND ZONING USE
DEVELOPMENT SUMMARY
PRE-SUBDIVISION:
TMS NO. 313-00-00-056 21.600 ACRES
TMS NO. 313-00-00-057 12.102 ACRES
TOTAL 33.702 ACRES
POST-SUBDIVISION:
100 LOTS 12.802 ACRES
H.O.A. AREAS 16.314 ACRES
RIGHT-OF-WAYS 4.586 ACRES
TOTAL 33.702 ACRES
WETLANDS:
HOA'S AREAS 25.484 ACRES
WETLANDS 8.218 ACRES
TOTAL 33.702 ACRES
DENSITY:
100 LOTS / 25.484 AC 3.92 LOTS/AC

EXHIBIT "A"

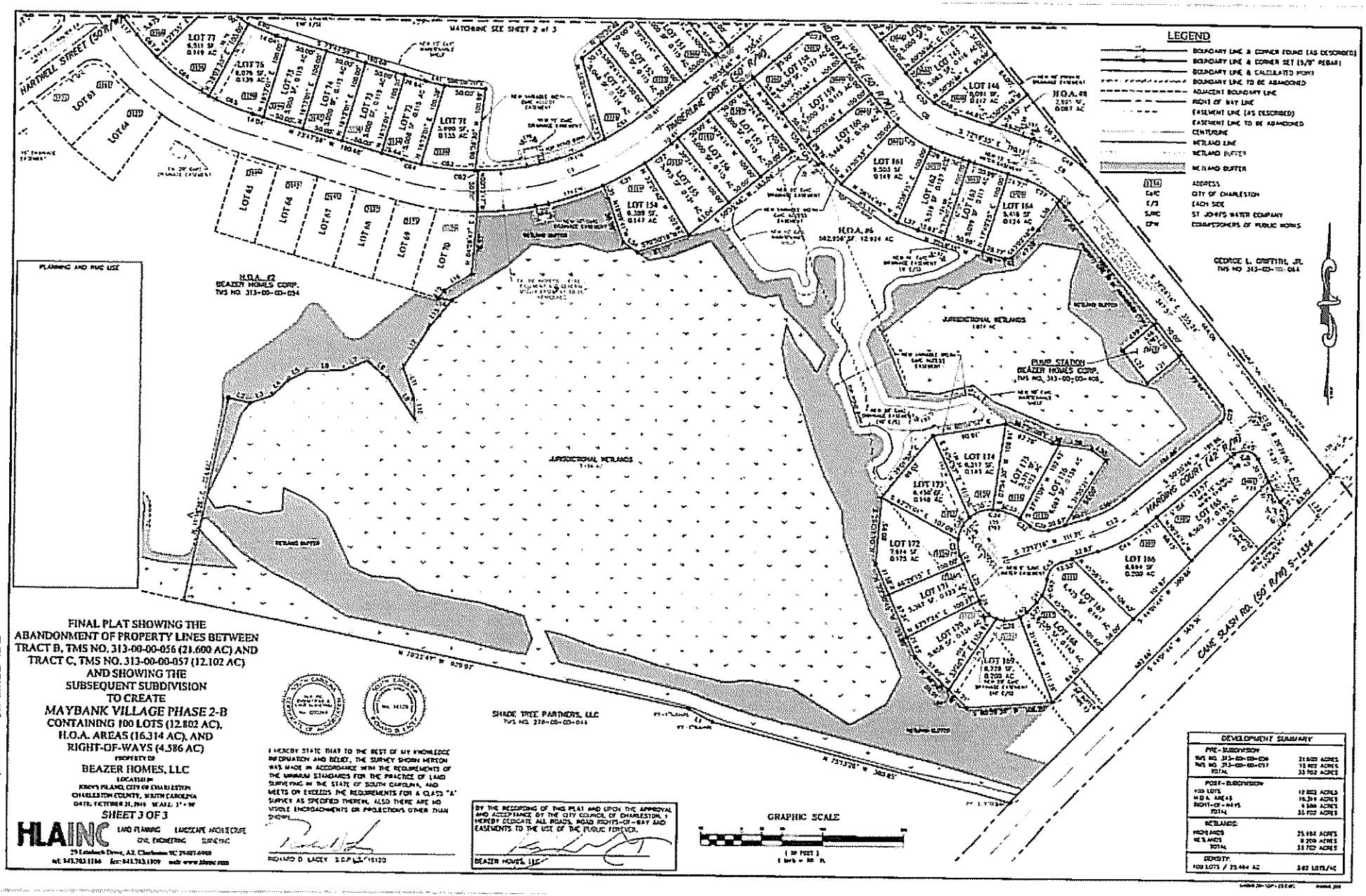
LEGEND
HARTNELL STREET (50' R/W)
BAY LANE (50' R/W)
HARDING COURT (40' R/W)
CANE SLASH RD. (50' R/W)
H.O.A. #2
BEAZER HOMES CORP.
H.O.A. #6
PUMP STATION
BEAZER HOMES CORP.
JURISDICTIONAL WETLANDS
WETLAND BUFFER
SHADE TREE PARTNERS, LLC
GEORGE L. GRIFFITH, JR.
PLANNING AND RUC USE
GRAPHIC SCALE
DEVELOPMENT SUMMARY
FINAL PLAT SHOWING THE
ABANDONMENT OF PROPERTY LINES BETWEEN
TRACT B, TMS NO. 313-00-00-056 (21.600 AC) AND
TRACT C, TMS NO. 313-00-00-057 (12.102 AC)
AND SHOWING THE
SUBSEQUENT SUBDIVISION
TO CREATE
MAYBANK VILLAGE PHASE 2-B
CONTAINING 100 LOTS (12.802 AC),
H.O.A. AREAS (16.314 AC), AND
RIGHT-OF-WAYS (4.586 AC)
BEAZER HOMES, LLC
SHEET 3 OF 3
HLA INC
BEAZER HOMES, LLC

J2(a)(iii)

10-415

SCDOT
South Carolina
Department of Transportation

MEMORANDUM

TO: Christy A. Hall, Secretary of Transportation
Brian W. Keys, Deputy Secretary for Finance & Administration

FROM: Michael W. Barbee Director, Rights of Way Michael W. Barbee

DATE: October 25, 2016

RE: Execution of Quitclaim Deed for Surplus Property
US Route 52 Spur – Charleston County

A request was received from the City of Charleston to reduce the right of way along US Route 52 Spur so that a grease trap could be installed. The engineering sections concurred with relinquishing the right of way. Approval to convey the property was obtained from the Secretary of Transportation on August 8, 2016. Therefore, a gratis quitclaim deed conveying approximately 0.18 of an acre of land to City of Charleston is recommended for your execution. ***Two copies of the Quitclaim Deed are attached for execution.***

Derivation:

The Department acquired right of way for US Route 52 Spur (f/k/a Road S-29) by virtue of Legislative Act 648 of 1939 and action of the Commission on April 1, 1940.

Please return to Right of Way Office, Room 422 or call 737-1526 upon completion.

Post Office Box 191
Columbia, South Carolina 29202-0191

Phone: (803) 737-2314
TTY: (803) 737-3870

AN EQUAL OPPORTUNITY
AFFIRMATIVE ACTION EMPLOYER

SCDOT R/W Form 203 (11-01)

10-415

STATE OF SOUTH CAROLINA)
) **QUITCLAIM DEED**
COUNTY OF CHARLESTON)

WHEREAS, pursuant to Section 57-5-340, Code of Laws of South Carolina, 1976, as amended, the South Carolina Department of Transportation has authority to dispose of the premises hereinbelow described, which premises are no longer required for purposes of the South Carolina Department of Transportation; Now Therefore,

KNOW ALL MEN BY THESE PRESENTS, that the South Carolina Department of Transportation ("Grantor"), for and in consideration of the sum of **Five and No/100 Dollars ($5.00)** to it in hand paid, receipt of which is hereby acknowledged, does hereby remise, release and quitclaim unto **City of Charleston** ("Grantee"), all its right, title, interest in or to the following described property:

> All that certain piece, parcel, or tract of land containing approximately 0.18 of an acre of land, situate, lying, and being along the Western side of US Route 52 Spur in the City of Charleston, in Charleston County, State of South Carolina, and being a portion of the Western right of way for US Route 52 (East Bay Street) reducing the present Western right of way to a new 20-foot right of way from the centerline of US Route 52 from Cumberland Street to Queen Street. Said parcel being shown on Exhibit A, attached hereto and made a part hereof.
>
> This being a portion of the right of way obtained for US Route 52 Spur (f/k/a Road S-29) by virtue of Legislative Act 648 of 1939 and action of the Commission on April 1, 1940.
>
> Grantees Address: Post Office Box 652
> Charleston, SC 29402

This conveyance is being made subject to any and all existing public utility rights of user, reservations, easements, rights of way, control of access, zoning ordinances and restrictions or protective covenants that may appear on record or on the premises, other than those hereby released.

TOGETHER with all and singular, the rights, members, hereditaments and appurtenances to the said premises belonging, or in anywise incident or appertaining.

TO HAVE AND TO HOLD, all and singular, the said premises before mentioned unto **City of Charleston**, its successors and assigns, forever.

WITNESS the hand and seal of the South Carolina Department of Transportation this 26th day of October, in the year of our Lord Two Thousand Sixteen.

Signed, sealed and delivered
in the presence of

SOUTH CAROLINA DEPARTMENT OF TRANSPORTATION

By: _____ (L.S.)
Christy A. Hall, Secretary of Transportation

By: _____ (L.S.)
Brian W. Keys, Deputy Secretary for Finance and Administration

THE STATE OF SOUTH CAROLINA)
) ACKNOWLEDGEMENT
COUNTY OF RICHLAND)

Personally appeared before me the above named Grantors on behalf of South Carolina Department of Transportation and acknowledged the due execution of the foregoing instrument.

Witness my hand and seal this 26th day of October, 2016.

Catherine L. Brooks
Notary Signature

Catherine L. Brooks
Printed Name of Notary

NOTARY PUBLIC FOR THE STATE OF SOUTH CAROLINA
My Commission Expires: 2/8/26
(Affix Seal if outside SC)

EXHIBIT "A"

THIS EXHIBIT IS A GRAPHIC REPRESENTATION OF THE QUITCLAIMED AREA AND IS IN DIRECT REFERENCE TO ENGINEERING PLANS, A COPY OF WHICH CAN BE OBTAINED FROM SCDOT HEADQUARTERS; 955 PARK STREET, COLUMBIA, SC 29201.

Charleston County
US Route 52 (East Bay Street)
No Plans

SOUTH CAROLINA DEPARTMENT OF TRANSPORTATION
QUITCLAIM AREA - 0.18 ACRE No Plans

Prepared	SCALE	
10/17/2016	0 40 80 FEET	Charleston County

STATE OF SOUTH CAROLINA }
COUNTY OF CHARLESTON } AFFIDAVIT FOR TAXABLE OR EXEMPT TRANSFERS

PERSONALLY appeared before me the undersigned, who being duly sworn, deposes and says:

1. I have read the information on this affidavit and I understand such information.

2. The property was transferred by the South Carolina Department of Transportation to City of Charleston on October 26, 2016.

3. Check one of the following: The deed is
   (A) [ ] subject to the deed recording fee as a transfer for consideration paid or to be paid in money or money's worth.
   (B) [ ] subject to the deed recording fee as a transfer between a corporation, a partnership, or other entity and a stockholder, partner, or owner of the entity, or is a transfer to a trust or as distribution to a trust beneficiary.
   (C) [✔] exempt from the deed recording fee because (See Information section of affidavit): #2 (Explanation required) (If exempt, please skip items 4-7, and go to item 8 of this affidavit.)

   If exempt under exemption #14 as described in the Information section of this affidavit, did the agent and principal relationship exist at the time of the original sale and was the purpose of this relationship to purchase the realty? Check Yes [ ] or No [ ]

4. Check one of the following if either item 3(a) or item 3(b) above has been checked. (See Information section of this affidavit):
   (A) [ ] The fee is computed on the consideration paid or to be paid in money or money's worth in the amount of _____.
   (B) [ ] The fee is computed on the fair market value of the realty which is _____.
   (C) [ ] The fee is computed on the fair market value of the realty as established for property tax purposes which is _____.

5. Check YES [ ] or NO [✔] to the following: A lien or encumbrance existed on the land, tenement, or realty before the transfer and remained on the land, tenement, or realty after the transfer. If "YES," the amount of the outstanding balance of this lien or encumbrance is _____.

6. The deed recording fee is computed as follows:
   (A) Place the amount listed in item 4 above here: _____
   (B) Place the amount listed in item 5 above here: _____
   (If no amount is listed, place zero here.)
   (C) Subtract Line 6(b) from Line 6(a) and place the result here: _____

7. The deed recording fee is based on the amount listed on Line 6(c) above and the deed recording fee due is: _____.

8. As required by Code Section '12-24-70, I state that I am a responsible person who was connected with the transaction as: the Property Management Manager for the South Carolina Department of Transportation.

9. I understand that a person required to furnish this affidavit who wilfully furnishes a false or fraudulent affidavit is guilty of a misdemeanor and, upon conviction, must be fined not more than one thousand dollars or imprisoned not more than one year, or both.

Kathryn E. Copeland
Responsible Person Connected with the Transaction

Kathryn E. Copeland
Print or Type Name Here

Sworn this 26th day of Oct. 2016

Jean C. Barnes
Notary Public for South Carolina

Jean C. Barnes
Print or Type Name Here

My Commission Expires: 11/18, 2024

KL)

Ratification
Number_____

AN ORDINANCE

TO AMEND THE ZONING ORDINANCE OF THE CITY OF CHARLESTON BY CHANGING THE ZONE MAP, WHICH IS A PART THEREOF, SO THAT PROPERTY LOCATED ON MAYBANK HIGHWAY AT PROMENADE VISTA STREET (JAMES ISLAND) (APPROXIMATELY 10.57 ACRES) (TMS #424-00-00-001) (COUNCIL DISTRICT 6), BE REZONED FROM GATHERING PLACE (GP) CLASSIFICATION TO PLANNED UNIT DEVELOPMENT (PUD) CLASSIFICATION. **(AS AMENDED)**

BE IT ORDAINED BY THE MAYOR AND COUNCILMEMBERS OF CHARLESTON, IN CITY COUNCIL ASSEMBLED:

Section 1. That the Zoning Ordinance of the City of Charleston be, and the same hereby is amended, by changing the zone map thereof so as to rezone the property described in Section 2 hereof by changing the zoning designation from Gathering Place (GP) classification to Planned Unit Development (PUD) classification.

Section 2. The property to be rezoned is described as follows:

property located on Maybank Highway at Promenade Vista Street (James Island) (approximately 10.57 acres) (TMS #424-00-00-001)

Section 3. This ordinance shall become effective upon ratification.

Ratified in City Council this _____day of _____ in the Year of Our Lord _____, in the _____ Year of Independence of the United States of America.

By: _____
John J. Tecklenburg
Mayor, City of Charleston

Attest: _____
Vanessa Turner Maybank
Clerk of Council

City of Charleston

City Council
June 21, 2016

Area

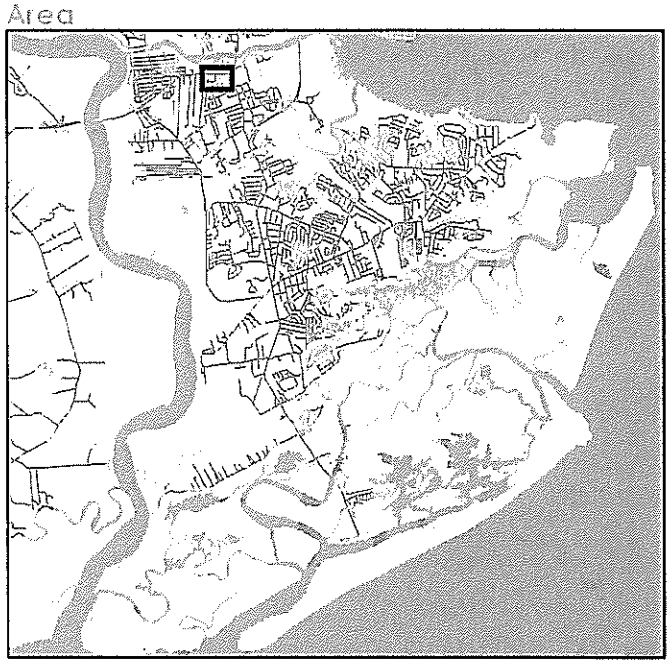

Rezoning

Maybank Hwy at Promenade Vista St

TMS# 4240000001

approximately 10.57 ac.

Request rezoning from Gathering Place (GP) to Planned Unit Development (PUD)

Owner: CPC James Island, LLC
Appllicant: Hellman Yates & Tisdale, PA

Location

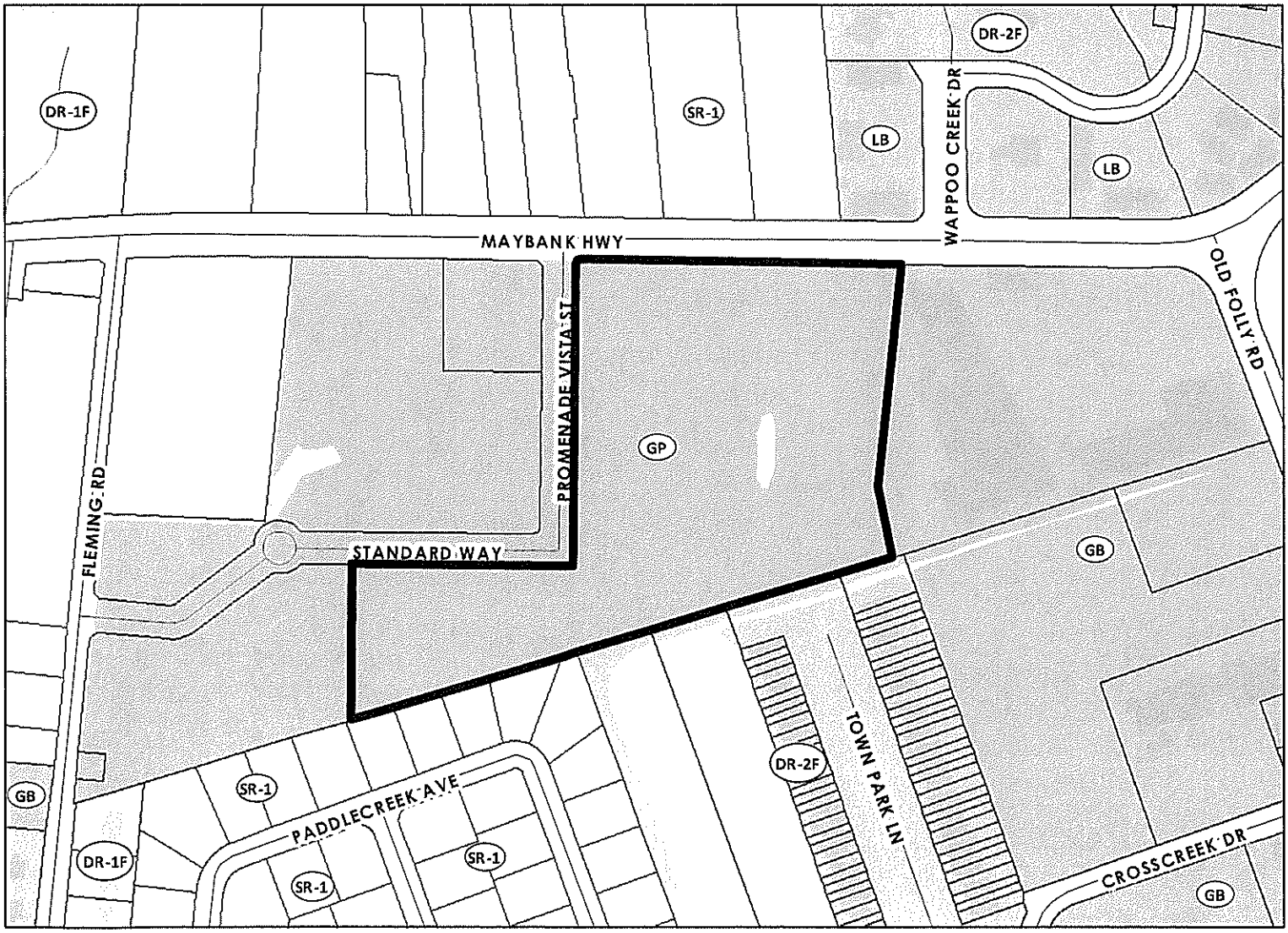

Department of Planning, Preservation & Sustainability
www.charleston-sc.gov 2 George St, Charleston, SC 29401 843.724.3765

N

DEVELOPMENT GUIDELINES

FOR THE

MAYBANK PLANNED UNIT DEVELOPMENT

James Island, City of Charleston, South Carolina

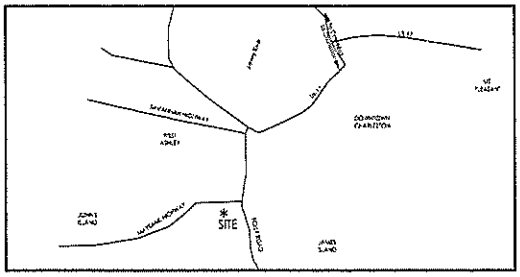

City Project ID # 160705-MaybankHwy-1

Approved _____, 2016

Prepared for:

CORE PROPERTY CAPITAL

AND

CPC James Island, LLC
3060 Peachtree Road
Suite 220
Atlanta, GA 30305
(Owner)

Prepared by:

HELLMAN YATES & TISDALE
ATTORNEYS AND COUNSELORS AT LAW

HELLMAN YATES & TISDALE, PA
105 BROAD STREET, THIRD FLOOR
CHARLESTON, SOUTH CAROLINA 29401
843 266-9099

The Maybank PUD Master Plan was approved by Charleston City Council on _____ Ordinance Number_____.

1.2 Project Location, Location Map, and Description

The project site is located within the limits of the City of Charleston, South Carolina with a tax map number of 424-00-00-001. The project site consists of approximately 10.57 gross acres and is located on Maybank Highway and Promenade Vista Street as shown below.

1.3 Land Use Summary

The purpose of the Planned Unit Development District is to provide for the development of a planned integrated community that incorporates residential and certain commercial uses which primarily serve the inhabitants of the district and adjacent developments. This project meets the requirements for a Planned Unit Development by providing several different uses, which are listed below:

Residential – The residential component of this development will allow for two different types of apartment and condominium type multi-family residential uses. These two types allow for buildings of differing heights and configurations to preserve the comparable street frontage heights along Maybank Highway while engaging the streetscape and increasing building heights in the central portion of the development to create building footprints that will allow for underground stormwater detention to preserve the natural character of the rear of the site.

Commercial - The commercial component of this development will allow for uses permitted in the City of Charleston Zoning Ordinance Limited Business, (LB) District as modified by Section 1.4.3.4., herein. Commercial uses are permitted in designated first floor areas of the residential districts.

Conservation and Usable Open Space - The conservation and usable open space component of this development will allow for the preservation of the natural character of the rear of the site and the retention of trees in use-restricted conservation designated areas in accordance with recorded covenants, while usable open space designated areas will allow for open green space areas usable by residents, guests, and commercial use patrons.

Having three different uses for this development meets the standards set for a Planned Unit Development.

The proposed land use is as follows:
(All acreages are approximate and subject to change per City staff review)

Gross Land Area	10.57 Ac.
Conservation Open Space including Tree Save Area	3.26 Ac.
Usable Open Space	1.00 Ac.
Salt Water Marsh	0.00 Ac.
Wetlands	0.00 Ac.
Combined Salt/Fresh Water Wetlands	0.00 Ac.
Minimum Dwelling Units	272 DU
Maximum Dwelling Units	279 DU
Net Developable Land	10.57 Ac.

1.4 Zoning Districts and Design

1.4.1 Residential Multi-Family 3 Story District

1. The Residential Multi-Family 3 Story district is identified in the areas depicted as 3 Story Building in the Master Plan and is intended to allow high density residential development that permits allowable commercial uses in designated areas.
2. Any structure shall be three (3) stories in height, not to exceed a maximum of fifty-five (55') feet as measured from the average curb on Maybank Highway adjacent to the project site to the nearest building

eave in the district, and no less than would be necessary to allow for at least a nine (9') ceiling at each story using conventional construction materials. Maximum ridge heights and applicable roof pitches shall be as determined by the City's administrative officer set forth in Section 1.4.6.

3. There shall be no setback requirements or maximum lot occupancy requirements.
4. There shall be a parking requirement of 1.4 spaces per dwelling unit, a portion (no more than 30%) of which may be compact spaces. No off street loading shall be required. Parking may be shared with the 4 Story District.
5. The total of all conditioned space in the Residential Multi-Family 3 Story district and the Residential Multi-Family 4 Story district shall be at least 251,000 rentable square feet (measured from the conditioned interiors of rentable units).

1.4.2 Residential Multi-Family 4 Story District

1. The Residential Multi-Family 4 Story district is identified in the areas depicted as 4 Story Building in the Master Plan and is intended to allow high density residential development that permits allowable commercial uses in designated areas.
2. Any structure shall be four (4) stories in height, not to exceed a maximum of sixty (60') feet as measured from the average curb on Maybank Highway adjacent to the project site to the nearest building eave in the district, and no less than would be necessary to allow for at least a nine (9') ceiling at each story using conventional construction materials. Maximum ridge heights and applicable roof pitches shall be as determined by the administrative officer set forth in Section 1.4.6.
3. There shall be no setback requirements or maximum lot occupancy requirements.
4. There shall be a parking requirement of 1.4 spaces per dwelling unit, a portion (no more than 30% of which) may be compact spaces. No off street loading shall be required. Parking may be shared with the 3 Story District. Parking may be permitted under or within portions of the Residential Multi-Family 4 Story district where specifically designated on the Conceptual Site Master Plan.
5. The total of all conditioned space in the Residential Multi-Family 3 Story district and the Residential Multi-Family 4 Story district shall be at least 251,000 rentable square feet (measured from the conditioned interiors of rentable units).

1.4.3 Commercial District

1. The Commercial District is designed to serve and enhance residential areas by providing a zoning district or overlay, as applicable, to allow for commercial uses in designated areas on first (ground) floors within residential districts. It is the intent to provide a zoning classification that will provide for those commercial uses which are compatible with and

that compliment adjoining residential districts. Leasing and amenity uses shall be deemed commercial uses.

2. There shall be no setback requirements or maximum lot occupancy requirements, provided that a maximum of 5,000 square feet of the Commercial District shall exist in the Residential Multi-Family 3 Story District and a maximum of 6,500 square feet of the Commercial District shall exist in the Residential Multi-Family 4 Story District. In no event shall the total commercial development, however, exceed 7,500 square feet. Residential uses remain permitted uses in areas that are depicted as permitting commercial uses in residential areas.
3. There shall not be a parking requirement for commercial development. Off street loading and commercial parking shall be permitted in on site standard automobile sized parking spaces.
4. The following uses, permitted under the City of Charleston's Limited Business (LB) zoning district, shall be permitted outside the hours of 7:00 AM to 11:00 PM: Fitness Centers, Health Clubs, Spinning Studios, Gymnasiums, and similar, provided that such uses are not manned by employees after the hours of 11:00 PM and prior to 4:30 AM.

1.4.4 Conservation Open Space District

The Conservation Open Space District will be used to preserve and enhance the natural character and existing landscape in accordance with existing recorded covenants. This will allow for reduced impact to the proliferation of grand trees while taking advantage of the topography and other existing site features. Conservation Open Space designated areas shall be limited in use solely to protect, conserve, and maintain forested and scenic areas and to filter and absorb stormwater. The existing stormwater pond use shall be permitted in the Conservation Open Space District. Improvements, linear utilities and connections (such as stormwater pipes), new and modified outfall structures and drainage are permitted to be made to the existing stormwater pond. However no new stormwater ponds nor increases in the boundaries of the existing stormwater pond beyond City requirements and restrictive covenants in place as of the adoption of this planned unit development shall be permitted. The Conservation Open Space District shall not require parking. The Conservation Open Space District shall not be subdivided out of the parent parcel and shall be maintained by the owner of the parent parcel. Uses not permitted in the Declaration of Covenants and Restrictions for Tree Save Areas dated June 15, 2015, and recorded in Book 483 at Page 38 in the RMC for Charleston County, as may be amended from time to time as permitted therein, shall govern the uses of the Conservation Open Space District.

1.4.5 Usable Open Space District

Usable Open Space District is designed to have usable open space that allow for open green space areas usable for development gatherings and events for the use of residents, guests, and commercial use patrons. The Usable Open Space District shall not require parking. A mass/public transit stop shall be permitted

in the Usable Open Space at the intersection of Standard Way and Promenade Vista Street. Conditioned Buildings shall not encroach in the Usable Open Space District, provided that porches, patios, overhangs, stoops, gutters, eaves, walkways, and sidewalks may encroach into and over the Usable Open Space District from a neighboring district or districts.

1.4.6 Design Requirements

Approval of any development, exterior improvements, additions, or changes to any development shall be submitted solely to the administrative officer, as utilized in Section 54-268.c., for her or his approval and shall meet applicable ADA and FHA regulations. One (1) year after a Certificate of Occupancy or Certificates of Occupancy, as may be applicable, has or have been granted for the fully completed development permitted within this Planned Unit Development District, any approval shall go before the administrative officer or the Design Review Board as may be required by Section 54-268.

1.5 Open Space

20% of the gross project acreage must be set aside as permanent open space ("Required Open Space"). Of this Required Open Space, 25% must be set aside as active use open land (Usable Open Space District). The purpose of this section is to describe the characteristics of open space land and uses allowed within permanent open space.

Open spaces designated on the Master Plan or identified during Site Plan approval shall be improved or conveyed as the development is developed. Potential uses are outdoor spaces that are planned, designed and managed for ecological, recreational (including sidewalks), cultural, and aesthetic purposes.

The developers/owner shall be responsible for the maintenance of the open space. This may be transferred by means of the establishment of a homeowners association or neighborhood regime.

OPEN SPACE REQUIREMENT

2.114 acres of open space is required within the Planned Unit Development districts. Actual open space provided is as shown in the Appendix.

Usable Open Space District	0.529 ac.
Conservation Open Space District	1.59 ac.
Total Open Space Required	2.114 ac.

1.6 Buffers and Landscaping

Buffers within the Planned Unit Development District shall be as follows:

1. Maybank Highway - Usable Open Space (note that the portion of the Usable Open Space District runs along Maybank Highway and, while no buffer is required, this portion of the district shall generally contain the vegetation types with quantities suggested by City of Charleston Buffer Type C (and shall include street trees along and within the Maybank Highway right of way toward such quantities), subject to adjustment by City Staff or the administrative officer).
2. Promenade Vista – Usable Open Space or Perimeter Vehicular per Ordinance Section 54-343, as applicable.
3. East Side: 10' Type B Buffer with the same plant material requirement as a typical 15' type B Buffer).
4. Buffer along Residential DR-2F and SR-1: Undisturbed 25' with the ability to augment with additional native (where practicable) plant material and is part of the tree save area under recorded covenants. Improvements, linear utilities and connections (such as stormwater pipes), new and modified outfall structures and drainage are permitted to be made to and from the existing stormwater pond.

Buffer areas designated for conservation should be preserved and protected during the construction process and existing vegetation should be augmented with new plant material as necessary to provide a consistent sense of spatial separation and effectively screen different land uses, zoning designations or roads visually.

Landscaping requirements for parking areas and parking lots shall meet the following requirements: Parking lot landscape islands shall not be required if alternative placements will allow for an equal or greater number, size, or preferred species of tree may be planted. Each parking row shall terminate with landscape islands.

All projects affected by the landscape and screening requirements shall submit a plan for review and approval by the Zoning Division. The plan shall be consistent with the requirements outlined in the City of Charleston Zoning Ordinance as may be modified by the Conceptual Site Master Plan or the administrative officer. Buffers shall not be required between the different Districts in the PUD. Buffer areas, where applicable and specifically depicted on exhibits hereto, may be included in the Conservation Open Space calculations.

1.7 Tree Summary

All developments within the Planned Unit Development District, except as set forth herein, shall adhere to Article 16 of the City of Charleston Zoning Ordinance. The variance granted on December 7, 2011, that permitted the removal of certain trees shall be incorporated herein as a right. Any trees located outside of areas depicted as Tree Save Areas or Conservation Open Space may be removed.

One (1) year after a Certificate of Occupancy or Certificates of Occupancy, as may be applicable, has or have been granted for the fully completed development permitted within this Planned Unit Development District, removal of any trees shall be subject to Section 54-327 of the City of Charleston Zoning Ordinance.

1.8 Right of Ways and Sidewalks

Public Right of Ways, if any, shall meet Street Design Requirements and Standards in the City of Charleston zoning code in Sec. 54-821. Sidewalks along Maybank Highway shall be eight (8') feet wide and shall include street lights and tree wells as approved by the City of Charleston Parks Department. Sidewalks along Promenade Vista Way shall be at least five (5') feet wide, or as presently constructed and accepted by the City of Charleston. Approval of required street trees and street lights shall be by the City of Charleston Parks Department. Sight distance visibility at all exits and/or intersections will be maintained in accordance with SCDOT Access and Roadside Management Standards (ARMS) Manual. Direction and traffic signage shall conform to the MUTCD standards. Streets, Sidewalks, and Trails shall meet the requirements of Table 8-2.1: Street Design Requirements, Section 54-821.

1.9 Drainage Basin Analysis

Maybank PUD will be developed within the current stormwater management guidelines of the City of Charleston for water quality and quantity. Water quality and quantity is of the utmost importance.

The land contains no wetlands or critical area. The majority of the land is graded or wooded. The proposed project will include a drainage plan in accordance with the City requirements. The proposed drainage for the development will generally maintain the existing drainage pattern and may use a series of drainage boxes, pipes, swales, existing ponds, and undergound detention. Conceptual stormwater management designs may call for the use of underground detention and drainage systems, submerged or otherwise, interfacing with existing facilities on the property to meet the City of Charleston Stormwater Standards Design manual, including but not limited to the requirement to provide a stormwater technical report (SWTR) prior to any subdivision conceptual plan.

1.10 Post-Development Requirements

1. CPC James Island, LLC, its successors and assigns, commit to fund the installation of a traffic signal and crosswalks at the intersection of Maybank Highway and Fleming Road, should traffic studies show a warrant, or should the City of Charleston reach an agreement with SCDOT for such a traffic signal within 5 years from the date of the approval of the Maybank PUD.

2. CPC James Island, LLC, its successors and assigns, shall work with CARTA to provide a logical sheltered bus stop location, with proximity to the maximum number of riders and where permitted by in the Maybank PUD. Design of such shelter shall be subject to CARTA and standard City of Charleston requirements.

2. Tax Map.

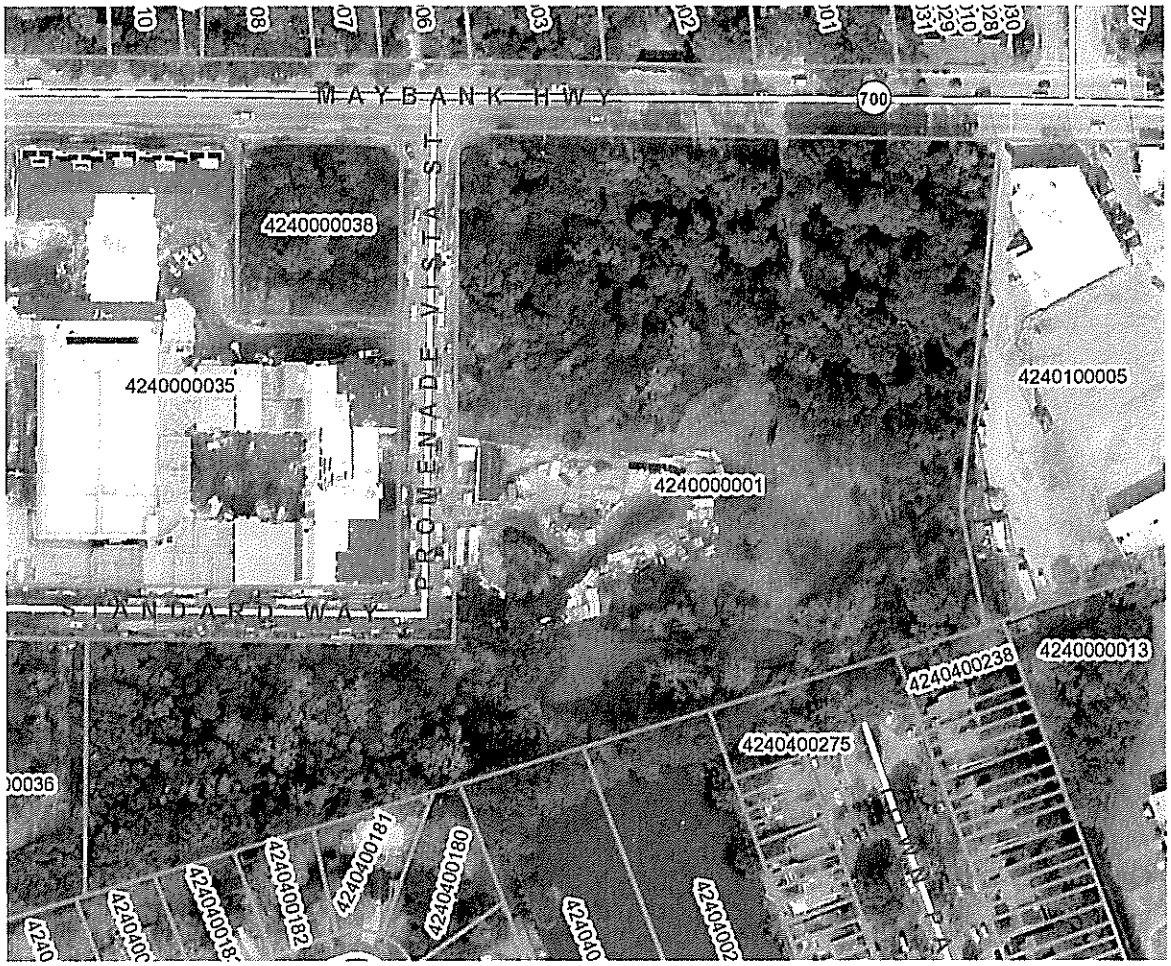
MAYBANK HWY
700
PROMENADE VISTA ST
STANDARD WAY
4240000038
4240000035
4240100005
4240000001
4240400238
4240000013
4240400275
4240400181
4240400180
4240400182

3. LETTERS OF COORDINATION
   A. SCE&G

SCE&G
A SCANA COMPANY

September 9, 2015

Chip Dillard
Core Property Capital
3060 Peachtree Road
Suite 220
Atlanta, GA 30305

Re: TMS# 424-00-00-001 Charleston County, SC

Dear Mr. Dillard:

This letter will verify that South Carolina Electric and Gas Company has sufficient electric and natural gas capacity to serve the referenced parcel above. Electric and gas service will be provided in accordance with SCE&G's General Terms and Conditions, other documents on file with the South Carolina Public Service Commission, and the Company's standard operating policies and procedures.

Please contact me at 843-576-8447 if you have any questions or if I may be of assistance.

Sincerely,

Steven M. Morillo
Customer Service Engineering

B. CHARLESTON WATER SYSTEM

Charleston
Water System

PO Box B
Charleston, SC 29402
103 St. Philip Street (29403)

(843) 727-6800
www.charlestonwater.com

Board of Commissioners
Thomas B. Pritchard, Chairman
David E. Rivers, Vice Chairman
William E. Koopman, Jr., Commissioner
Mayor Joseph P. Riley, Jr. (Ex-Officio)
Councilmember Dean C. Riegel (Ex-Officio)

Officers
Kin Hill, P.E. Chief Executive Officer
Dorothy Harrison, Chief Administrative Officer
Wesley Ropp, CMA, Chief Financial Officer
Andy Fairey, Chief Operating Officer
Mark Cline, P.E. Capital Projects Officer

7/14/2015

Mr. Josh Lilly
Stantec
4969 Centre Pointe Dr., Ste. 200
North Charleston, SC 29418

Re: Water Availability to TMS #424-00-00-001 to serve 417 residential units & 22,500 sf commercial unit

Dear Mr. Lilly,

This letter is to certify our willingness and ability to provide water to the above referenced site in Charleston County, South Carolina. We currently have a 10" water main in the right-of-way of Maybank Hwy. and a four inch water main in the right-of-way of Fleming Rd. that your property may be served from. Please be advised that it will be necessary to connect the proposed mains into both existing mains according to Charleston Water System policy. This review does not supplant any other review as required by governing authorities and municipalities. It will of course be a developer responsibility to ensure there are adequate pressures and quantities on this line to serve this site with domestic water/fire flow and not negatively impact the existing developments. Please be advised any extensions or modification to the infrastructure as well as any additional fire protection will be a developer expense. All fees and costs associated with providing water service to this site will be a developer expense. This letter does not reserve capacity in the Charleston Water System infrastructure and it is incumbent upon the developer or his agent to confirm the availability herein granted past 12 months of this correspondence.

The Charleston Water System certifies the availability of service only insofar as its rights allow. Should access to our existing main/mains be denied by appropriate governing authorities, the Charleston Water System will have no other option than to deny service.

Please contact James Island PSD with wastewater service issues.

This letter is not to be construed as a letter of acceptance for operation and maintenance from the Department of Health and Environmental Control.

If there are any questions pertaining to this letter, please do not hesitate to call on me at (843) 727-6870.

Sincerely,

Cheryl L. Boyle
Engineering Assistant
Charleston Water System
cc: file

This is an "uncontrolled" copy of a controlled document.

C. AT&T

at&t

385 Meeting St Suite 322
Charleston, SC 29403

Tel: 843-722-5066
Fax: 843-722-5270

September 09, 2015

ATTN: Mr. Chip Dillard
Core Property Capital
3060 Peachtree Road
Suite 220
Atlanta, Georgia 30305

Re: Will Serve Letter – Verification of Available AT&T Services For:

Maybank Highway Multi-Family
1815 Maybank Hwy
Charleston, SC 29412

Dear Mr. Dillard

This is to verify that AT&T Southeast will provide underground voice, data, & video services to the planned development known as Maybank Highway Multi-family, 1815 Maybank Hwy, in Charleston, SC 29412 located within TMS #'s 424-00-00-001. Service to this project will be provided as a mixed use development, both commercial & residential.

The provisioning of this service is contingent upon receiving approved plans of the development with addresses approved by the 911 service center, granted utility easements either inside equipment room with controlled environment or a 10' X 10' site for a cabinet, handholes & cables, and proper lead time to design and install the services. Installation of these services will begin after the Power Company has completed installation of their facilities, the right of way is cleared of all obstacles, and the right of way has been graded to within six inches of final grade.

Plans should be submitted to AT&T, Attn: Mike Caruso 3246 Fortune Dr , N. Charleston, SC 29418 or email PDF file to mc0761@att.com. We would appreciate your acknowledgement of receipt of this letter and your approval of the above conditions. Please indicate your approval by signing this letter and returning in it to me either by mail or by fax to (843)-760-0163

Should you have any question or concerns, please contact me at (843) 552-3997.

Sincerely, Mike Caruso

Mike Caruso MGR-OSP Plng & Engrg Design

Approval:_____

D. JAMES ISLAND PSD

Wastewater Superintendent
David Hoffman

Maintenance and Operations
Supervisor
Jeff Cohen

Wastewater Department
James Island Public Service District

July 27, 2015

Stantec
Attn: Joshua Lilly, P.E.
4969 Centre Pointe Drive, Ste. 200
North Charleston, SC 29418

Re: TMS# 424-00-00-001
0 Maybank Hwy

Dear Mr. Lilly:

The James Island Public Service District (District) **does** have sewer service provided to the above referenced property. This property is in the City of Charleston. Any property that will be subdivided into 3 or more lots is considered a development. We will need to see a full set of engineering drawings of the proposed development for review and approval.

Please visit the District's web site at www.jipsd.org to view our Design, Guidelines and Standards. If you have any questions or need additional information, please call me at the District office at 843-762-5258.

Sincerely,

David J. Hoffman, Jr.
Wastewater Superintendent

c: Chris Seabolt, Fire Chief via email
Customer Service Department via email

Please note: **This letter expires six (6) months from date of issuance**

1739 Signal Point Road / P.O. Box 12140
Charleston, SC 29422-2140
(843) 762-5258 / fax (843) 762-5252
www.jipsd.org

E. CHARLESTON COUNTY SCHOOL DISTRICT

Charleston County SCHOOL DISTRICT

2016

August 18, 2016

Erica Chase
Associate - Stantec
4969 Centre Point Drive Suite 200
North Charleston, SC 29418-6952
(843) 740-6342

Operations

Gerrita Postlewait
Superintendent of Schools

Jeff Borowy, P.E.
Chief Operating Officer

Sean Hughes
Director of Operational Planning

RE: TMS# 424-00-00-001

Dear Ms. Chase,

Please accept this letter as "Proof of Coordination" for the 17.47 acre development located on Maybank Highway on James Island in Charleston County (TMS #: 424-00-00-001).

To determine an estimation of additional students any development will create, the following formula is used: An average of .4 students per single-family unit and .2 students per multi family unit which is then divided by the number of kindergarten through twelve grade levels (which is a total of 13 levels) to get a grade level average. That average is multiplied by the number of grade levels per school level and rounded to the nearest whole number.

The locations you supplied will involve three (3) different school zones. The expected impacts to enrollments are as follows:

- Elementary School, 25 students
- Middle School, 12 students
- High School, 17 students

We are supplying you the names of the schools that fall within the attendance area where your development will take place. These are subject to change. The information is as follows:

Elementary School:	Harborview Elementary School or Murray LaSaine Montessori
Middle School:	Fort Johnson Middle School
High School:	James Island Charter High School

Please contact me if there are additional questions or needs.

Sincerely,

Sean

Sean C. Hughes, LEED AP
Director of Operational Planning
Operations
Charleston County School District
Phone: (843) 566-8190

RECORDED

DATE: 6/26/2014 TIME: 1:06:31 PM

Book-Page: 0.00 0.00 Doc Type: Large Plat

Charlie Lybrand, Register, Charleston County, SC

Recorded For: CITY OF CHARLESTON
ATTENTION: MICHAEL DINWIDDIE

Recording Fee: $10.00
Postage: $0.00
TOTAL: $10.00
Stamps: 0.00
Clerk: $

Location: PROMENADE VISTA ST 2/2

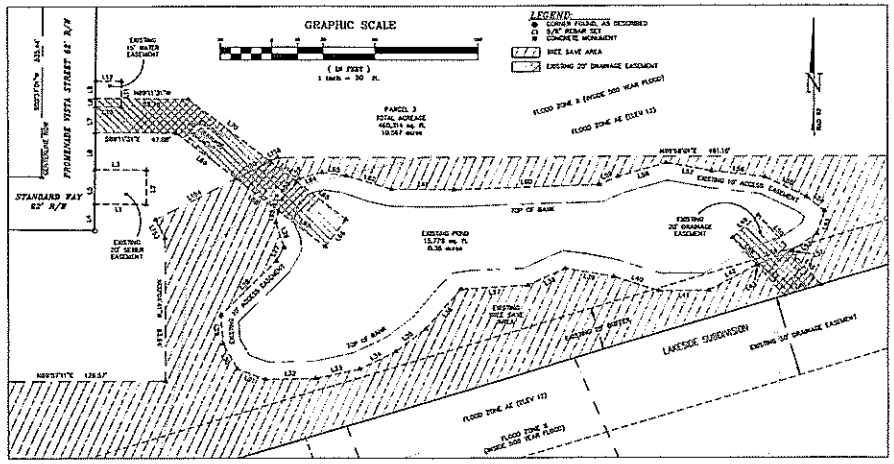

INSET "A"
SCALE: 1"=30'

LINE TABLE		
LINE	BEARING	DISTANCE
L1	S.89°57'31" W.	28.91'
L2	S.00°26'29" E.	20.00'
L3	S.89°57'31" W.	20.91'
L4	N.00°31'01" E.	15.77'
L5	N.00°31'01" E.	20.00'
L6	S.00°31'01" W.	20.00'
L7	N.00°31'01" E.	15.00'
L8	N.00°31'01" E.	4.81'
L9	N.00°31'01" E.	20.00'
L10	S.89°57'31" W.	14.94'
L11	S.00°31'01" W.	15.00'
L12	S.00°31'01" E.	11.52'
L13	N.44°57'31" E.	18.37'
L14	N.00°26'29" E.	20.00'
L15	S.44°57'31" W.	8.49'
L16	N.00°31'01" E.	12.22'
L17	N.00°31'01" E.	11.47'
L18	N.00°31'01" E.	15.00'
L19	S.89°57'31" E.	8.94'
L20	S.00°31'01" W.	15.00'
L21	S.89°57'31" W.	8.91'
L22	S.00°31'01" W.	7.15'
L23	S.89°57'31" W.	13.42'
L24	S.00°31'01" W.	7.15'
L25	S.00°31'01" W.	8.00'
L26	S.00°31'01" W.	15.00'
L27	S.00°31'01" W.	8.21'
L28	S.00°31'01" W.	15.00'
L29	S.00°31'01" W.	17.00'
L30	S.00°31'01" E.	17.00'
L31	S.00°31'01" E.	17.00'
L32	N.89°57'31" E.	28.91'
L33	S.89°57'31" W.	20.00'
L34	N.89°57'31" E.	23.34'
L35	N.00°31'01" E.	22.19'
L36	N.00°31'01" E.	20.00'
L37	S.00°31'01" W.	19.00'
L38	S.00°31'01" W.	19.00'
L39	N.89°57'31" W.	28.91'
L40	S.00°31'01" E.	27.11'
L41	N.00°31'01" E.	28.00'
L42	N.00°31'01" E.	21.00'
L43	N.00°31'01" E.	0.34'
L44	N.00°31'01" E.	20.00'
L45	N.00°31'01" E.	25.34'
L46	N.00°31'01" E.	22.00'
L47	S.00°31'01" E.	24.00'
L48	S.00°31'01" E.	21.17'
L49	S.00°31'01" E.	20.00'
L50	S.00°31'01" E.	20.00'
L51	N.00°31'01" E.	0.79'
L52	N.00°31'01" E.	17.17'
L53	N.00°31'01" E.	14.00'
L54	N.00°31'01" E.	13.25'
L55	N.00°31'01" E.	20.00'
L56	N.00°31'01" W.	20.00'
L57	S.00°31'01" W.	20.00'
L58	S.00°31'01" W.	28.15'
L59	S.00°31'01" W.	31.00'
L60	S.00°31'01" W.	84.00'
L61	N.00°31'01" W.	20.00'
L62	N.00°31'01" W.	22.00'
L63	N.00°31'01" W.	14.42'
L64	S.00°31'01" E.	13.00'
L65	S.00°31'01" E.	34.15'

LINE TABLE		
LINE	BEARING	DISTANCE
L66	S.00°31'01" W.	20.00'
L67	S.00°31'01" E.	20.00'
L68	S.00°31'01" E.	20.00'
L69	S.00°31'01" E.	15.00'
L70	N.00°31'01" W.	20.00'
L71	N.00°31'01" W.	24.00'
L72	N.00°31'01" W.	8.00'
L73	N.00°31'01" W.	15.00'
L74	N.00°31'01" W.	10.00'
L75	N.00°31'01" W.	22.00'
L76	N.00°31'01" W.	10.00'
L77	N.00°31'01" W.	17.00'
L78	S.00°31'01" W.	21.00'
L79	S.00°31'01" W.	14.00'
L80	S.00°31'01" W.	10.00'
L81	S.00°31'01" W.	23.00'
L82	N.00°31'01" W.	21.00'
L83	N.00°31'01" W.	20.00'
L84	N.00°31'01" E.	20.00'
L85	S.00°31'01" E.	20.00'
L86	S.00°31'01" E.	22.00'
L87	S.00°31'01" E.	24.00'
L88	N.00°31'01" E.	20.00'
L89	N.00°31'01" E.	38.79'
L90	N.00°31'01" E.	14.00'
L91	S.00°31'01" E.	22.17'
L92	S.00°31'01" E.	12.17'
L93	S.00°31'01" E.	20.00'
L94	S.00°31'01" E.	17.00'
L95	S.00°31'01" E.	17.00'
L96	S.00°31'01" E.	17.00'
L97	S.00°31'01" E.	17.00'
L98	S.00°31'01" W.	1.00'
L99	N.00°31'01" E.	12.00'
L100	N.00°31'01" E.	22.00'
L101	N.00°31'01" E.	22.00'
L102	N.00°31'01" E.	4.83'
L103	S.00°31'01" E.	2.00'
L104	S.00°31'01" E.	4.00'
L105	S.00°31'01" E.	4.17'
L106	N.00°31'01" E.	0.17'
L107	N.00°31'01" E.	13.00'
L108	N.00°31'01" E.	15.00'
L109	N.00°31'01" E.	0.79'
L110	N.00°31'01" E.	19.15'
L111	N.00°31'01" W.	83.83'
L112	N.00°31'01" W.	12.17'
L113	N.00°31'01" W.	10.24'
L114	N.00°31'01" W.	15.00'
L115	S.00°31'01" W.	12.17'
L116	S.00°31'01" W.	8.83'
L117	S.00°31'01" W.	8.83'
L118	S.00°31'01" W.	8.79'
L119	S.00°31'01" W.	15.24'
L120	S.00°31'01" W.	8.79'
L121	S.00°31'01" E.	2.00'
L122	S.00°31'01" E.	1.00'
L123	S.00°31'01" W.	24.00'
L124	S.00°31'01" W.	8.79'
L125	S.00°31'01" W.	1.00'
L126	S.00°31'01" W.	21.00'
L127	S.00°31'01" W.	21.00'
L128	S.00°31'01" W.	45.00'
L129	S.00°31'01" W.	4.00'

NOTES:

1. ANYTHING SHOWN OUTSIDE THE DEFINED BOUNDARY OF THIS PLAT IS FOR DESCRIPTIVE PURPOSES ONLY.
2. AREA DETERMINED BY COORDINATE (GRID) METHOD.
3. THE PUBLIC RIGHTS OF WAY SHOWN ON THIS PLAT ARE ONLY THOSE USED AND MAINTAINED BY THE CITY OF CHARLESTON WITHIN THE BOUNDARY OF THIS PROPERTY. THEY ARE NOT AND DO NOT CONSTITUTE A TITLE SEARCH.
4. PROPERTY IS LOCATED IN FLOOD ZONE X (OUTSIDE THE 500 YEAR FLOOD PLAIN) AND FLOOD ZONE X (INSIDE THE 500 YEAR FLOOD PLAIN) AS SCALED FROM F.I.R.M. PANEL NO. 45079C0513J, REVISED NOVEMBER 17, 2004.
5. BEARINGS ARE BASED ON SOUTH CAROLINA STATE PLANE NAD 83. DISTANCES ARE GROUND DISTANCES.
6. BUILDING SETBACKS SHOULD BE CONFIRMED BY THE CITY OF CHARLESTON BEFORE ANY DESIGN OR CONSTRUCTION.
7. FREE SAVE AREAS ARE REQUIRED TO BE PROVIDED PER CONDITIONS BY BZA ON 10/7/2001.
8. THE MATCHED DRAINAGE EASEMENTS SHOWN WERE DEDICATED BY THAT CERTAIN PLAT RECORDED IN PLAT BOOK L33, PAGES 324-326 TO THE CITY OF CHARLESTON FOR ACCESS TO AND MAINTENANCE OF THE STORMWATER SYSTEM.
9. THE SEWER EASEMENTS SHOWN WERE DEDICATED BY THAT CERTAIN PLAT RECORDED IN PLAT BOOK L33, PAGES 324-326 TO THE JAMES ISLAND PUBLIC SERVICE DISTRICT FOR THE PURPOSE OF OPERATION AND MAINTENANCE OF SANITARY SEWER MAINS.
10. THE WATER EASEMENTS SHOWN WERE DEDICATED BY THAT CERTAIN PLAT RECORDED IN PLAT BOOK L33, PAGES 324-326 TO THE JAMES ISLAND PUBLIC SERVICE DISTRICT FOR THE PURPOSE OF OPERATION AND MAINTENANCE OF WATER MAINS.
11. THE 20' DRAINAGE EASEMENT WITHIN THE LAKESIDE SUBDIVISION WAS DEDICATED BY PLAT BOOK L33, PAGES 324-326 TO THE CITY OF CHARLESTON FOR ACCESS TO THE STORMWATER MANAGEMENT FACILITY. THE LONG-TERM MAINTENANCE AND OPERATION OF THE STORMWATER MANAGEMENT FACILITY IS THE RESPONSIBILITY OF THE OWNER(S) OF THE FACILITY AND SHALL BE COMPLETED IN ACCORDANCE WITH THE CONSULTANT'S SUPPLEMENTAL MAINTENANCE OF STORMWATER FACILITIES COMPLETED FOR THIS SUBDIVISION.
12. EASEMENTS MAY EXIST, WHICH WERE NOT NOTED ON THE REFERENCED PLATS, AND ARE OUTSIDE THE KNOWLEDGE OF THIS SURVEYOR.

REFERENCES:

PLAT BOOK	PAGE	RECORDED
L15	0324-0325	7.23.15
L15	0326	7.23.15
V9	0181	12.28.2012
CK	078	11.16.1992
EA	055	08.16.1990
AN	104	04.07.1979
AS	118	06.06.1983
AM	141	07.27.1979
AY	094	10.15.1983
S	035	12.23.1964

UNRECORDED PLAT BY
FREDERICK E. LANDRETH
DATED: 06.26.2006
REVISED: 10.22.2007

TMS #424-00-00-001

APPROVED PLAT
DATE: 9-6-95
ENGINEERING DIVISION
CITY OF CHARLESTON

SOUTH CAROLINA PROFESSIONAL LAND SURVEYOR No. 26597 PHILIP R. BRYAN JR.

SOUTH CAROLINA CERTIFICATE OF AUTHORIZATION SEAMON WHITESIDE & ASSOCIATES SURVEYING LLC C04034

I HEREBY STATE TO THE BEST OF MY KNOWLEDGE, INFORMATION, AND BELIEF, THE SURVEY SHOWN HEREON WAS MADE IN ACCORDANCE WITH THE REQUIREMENTS OF THE STANDARDS OF PRACTICE MANUAL FOR LAND SURVEYING IN SOUTH CAROLINA, AND MEETS OR EXCEEDS THE REQUIREMENTS FOR A CLASS "A" SURVEY AS SPECIFIED THEREIN.

PHILIP R. BRYAN, JR. S.C. Reg. 26597

1	8.11.15	REVISED PER MAPWALK SURVEY	PB
2	8.25.15	REVISED PER CITY OF CHARLESTON COMMENTS	JCB
NO.	DATE	DESCRIPTION	BY

SWA surveying LLC
1035-B Jenkins Road
Charleston, SC 29407
(843) 795-9330

A BOUNDARY SURVEY OF
TMS #424-00-00-001
PARCELS 3
OWNED BY J&W MAYBANK II, LLC
LOCATED IN THE CITY OF CHARLESTON
CHARLESTON COUNTY, SOUTH CAROLINA

DATE: 9/08/2015
DRAWN: JCB
CHECK: PRB
CO: JP
JOB: 12280
DWG: P3 boundary.dwg
SHEET: 2 OF 2

4.2 SURVEY WITH TREES

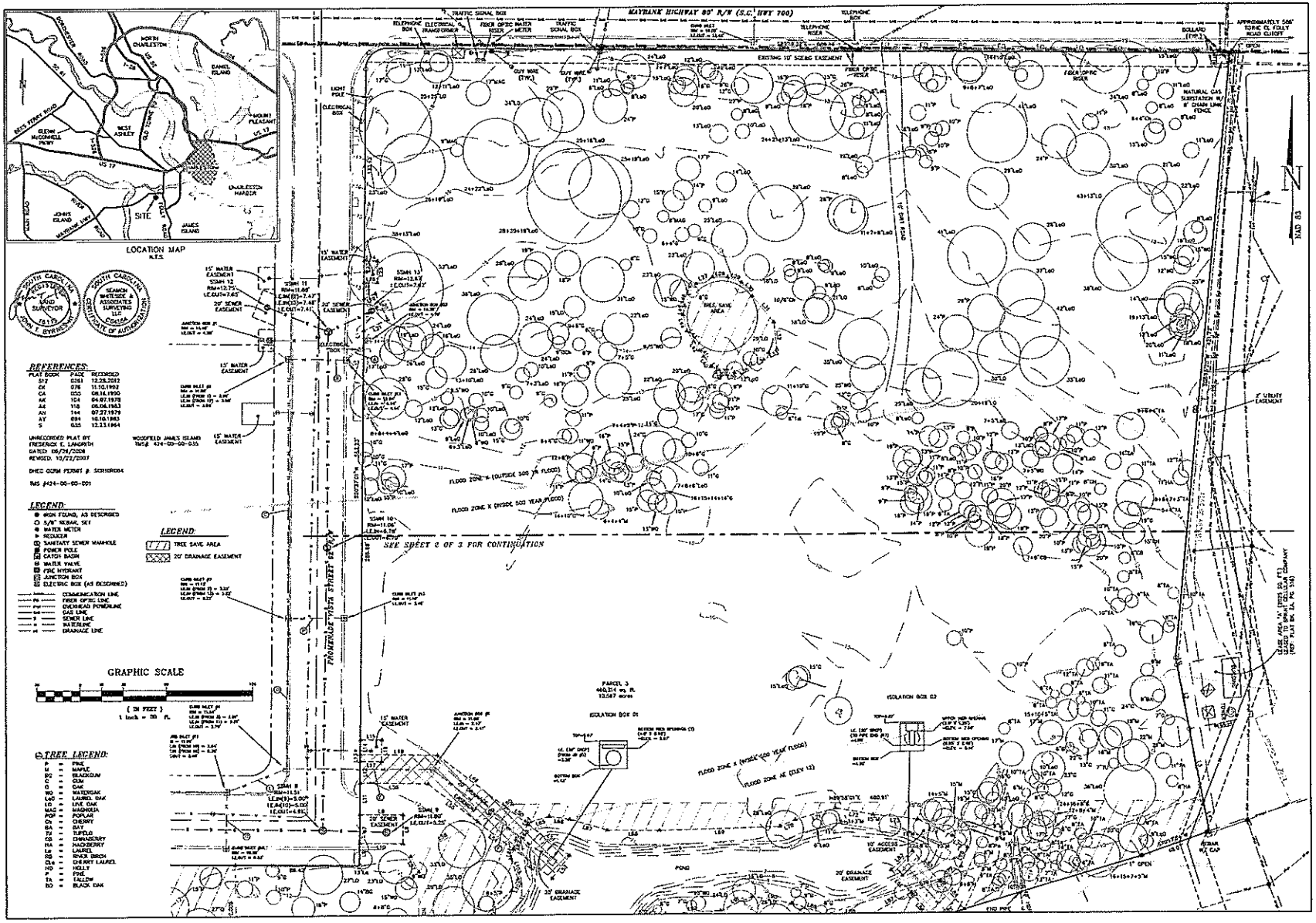

NO.	DATE	DESCRIPTION	BY

SWA surveying LLC
1035-B Jenkins Road
Charleston, SC 29407
(843) 795-9330

A TREE AND TOPOGRAPHICAL SURVEY OF PARCEL 3

TMS #424-00-00-001

OWNED BY JLW MAYBANK II, LLC.

LOCATED IN THE CITY OF CHARLESTON

CHARLESTON COUNTY, SOUTH CAROLINA

DATE: 6/24/2015
DRAWN: JKB
CHECK: FRB
CC #:
JOB: 15109
DWG: T1.dwg
SHEET: 1 OF 3

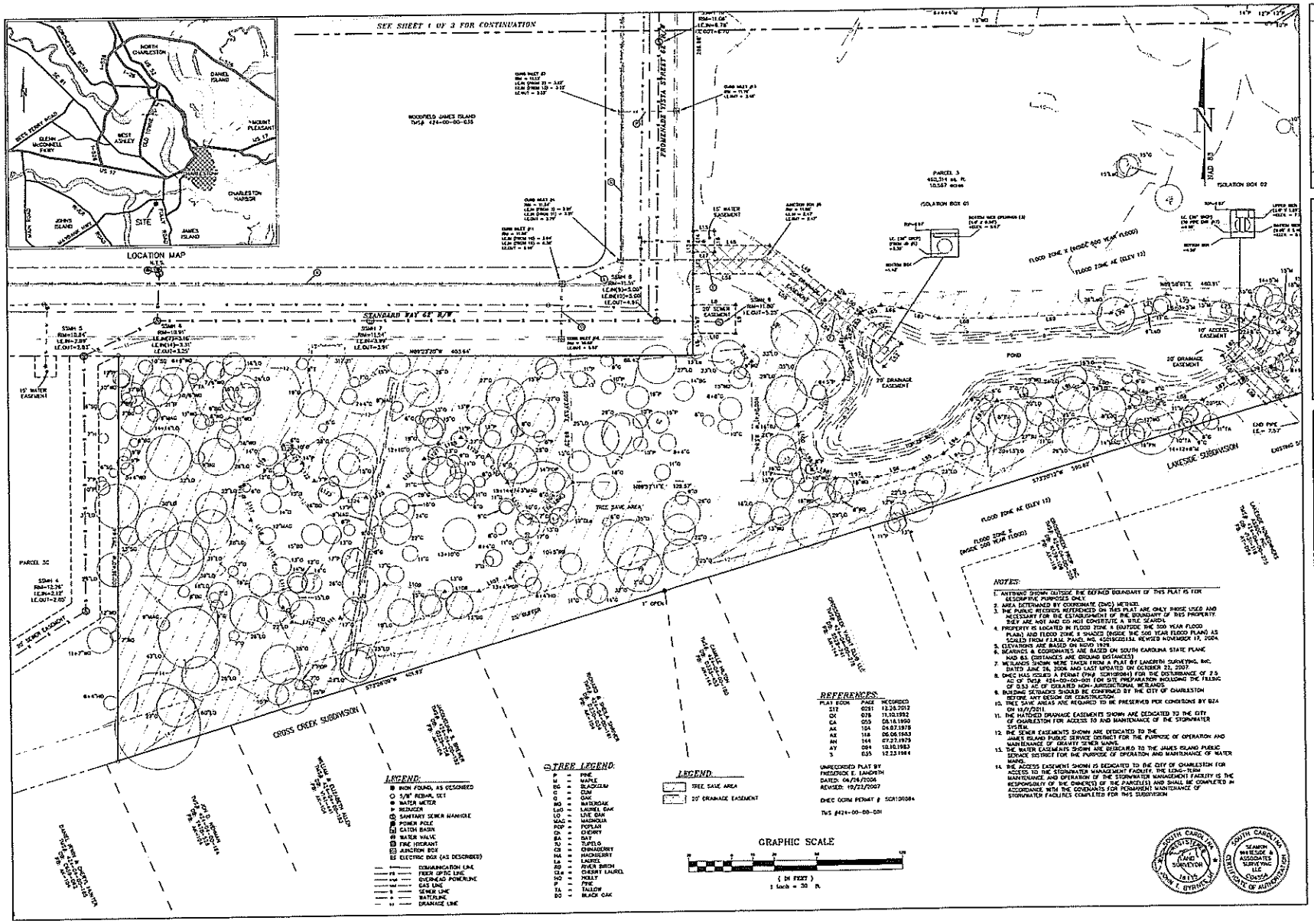

NO.	DATE	DESCRIPTION	BY

BWA surveying LLC
1035-B Jenkins Road
Charleston, SC 29407
(843) 795-9330

A TREE AND TOPOGRAPHICAL SURVEY OF PARCEL 3

TMS #424-00-00-001

OWNED BY JIM MAYBANK II, LLC

LOCATED IN THE CITY OF CHARLESTON

CHARLESTON COUNTY, SOUTH CAROLINA

DATE: 6/24/2015
DRAWN: JKB
CHECK: PRB
CC: JP
JOB: 15109
DWG: TT.dwg
SHEET: 2 OF 3

LINE TABLE		
LINE	BEARING	DISTANCE
L1	S 11°28'15" E	4.58'
L2	S 10°44'16" E	45.00'
L3	S 10°44'16" E	53.45'
L4	S 10°44'16" E	21.75'
L5	S 70°17'16" W	1.70'
L6	N 00°24'28" E	15.50'
L7	N 00°24'28" E	20.00'
L8	S 88°27'32" E	29.81'
L9	S 00°24'28" W	20.00'
L10	N 89°27'32" W	29.81'
L11	N 00°24'28" E	21.83'
L12	N 00°24'28" E	15.00'
L13	N 00°24'28" E	4.81'
L14	N 00°41'55" E	10.00'
L15	S 89°27'17" E	13.92'
L16	S 00°32'43" W	15.00'
L17	S 89°27'17" E	14.54'
L18	N 00°32'43" E	32.24'
L19	S 84°03'24" W	8.63'
L20	N 20°06'06" W	20.00'
L21	S 84°03'24" E	18.31'
L22	N 00°24'28" E	31.27'
L23	N 00°28'28" E	15.00'
L24	S 89°27'17" E	8.14'
L25	S 00°32'43" W	15.00'
L26	S 89°27'17" E	9.18'
L27	S 68°30'08" W	13.17'
L28	N 89°27'32" W	10.46'
L29	N 60°31'31" W	10.26'
L30	N 37°37'37" W	12.17'
L31	N 50°05'48" W	23.42'
L32	N 00°07'31" W	18.11'
L33	N 68°18'07" E	8.19'
L34	N 58°15'04" E	14.34'
L35	N 62°08'47" E	13.06'
L36	N 74°35'42" E	5.16'
L37	N 88°55'07" E	4.15'
L38	S 71°28'55" E	4.55'
L39	S 38°21'31" E	2.22'
L40	S 37°28'15" E	4.49'
L41	S 23°00'37" E	4.94'
L42	S 33°01'31" E	2.58'
L43	S 37°05'37" E	6.78'
L44	S 13°56'27" E	31.34'
L45	S 07°37'42" W	8.36'
L46	S 18°33'18" W	6.20'
L47	S 38°57'13" W	8.85'
L48	N 88°11'31" W	53.38'
L49	N 37°01'27" W	59.94'
L50	N 37°01'27" W	18.45'
L51	S 37°28'28" W	20.07'
L52	S 52°31'32" E	33.17'
L53	S 37°28'28" W	20.00'
L54	S 52°31'32" E	33.17'
L55	S 37°01'27" E	43.28'
L56	S 88°11'31" E	47.88'
L57	N 37°01'28" W	12.01'
L58	N 83°58'03" E	52.69'
L59	N 83°58'03" E	23.18'
L60	N 83°58'03" E	4.93'
L61	S 14°40'20" W	6.80'
L62	S 14°40'20" W	7.17'
L63	S 88°33'07" W	13.42'
L64	S 39°33'07" W	2.17'
L65	S 74°33'13" W	13.84'
L66	N 83°58'03" E	14.42'
L67	N 37°41'28" W	27.30'
L68	N 88°11'40" W	56.38'
L69	S 88°13'05" W	84.25'
L70	S 88°28'07" W	11.68'
L71	S 74°00'06" W	28.16'
L72	N 78°45'21" W	26.53'
L73	N 83°23'00" W	21.82'
L74	N 84°21'09" W	28.70'
L75	N 81°09'34" W	13.34'
L76	N 18°13'28" E	14.05'
L77	N 54°48'00" E	17.23'
L78	N 84°48'28" E	0.78'
L79	N 58°46'28" E	20.91'
L80	N 89°50'28" E	0.32'
L81	S 41°26'28" E	21.12'
L82	S 48°33'32" W	20.00'
L83	S 41°26'28" E	28.43'
L84	N 41°26'28" W	20.85'
L85	N 73°20'03" E	22.02'
L86	S 41°26'28" E	24.04'
L87	N 81°51'28" E	30.44'
L88	N 89°04'49" E	28.88'
L89	S 70°49'17" E	27.41'
L90	N 73°55'01" W	28.22'

LINE TABLE		
LINE	BEARING	DISTANCE
L91	S 89°36'05" W	24.07'
L92	S 88°28'17" W	30.84'
L93	N 47°22'34" E	30.84'
L94	N 52°31'45" E	22.13'
L95	N 84°18'39" E	23.26'
L96	N 77°01'13" E	26.05'
L97	N 89°26'29" E	29.41'
L98	S 69°41'18" E	17.22'
L99	S 30°02'30" E	16.75'
L100	S 84°29'48" E	17.20'
L101	S 45°55'11" W	45.39'
L102	S 20°06'06" W	5.21'
L103	S 18°01'45" E	15.22'
L104	S 50°13'48" W	38.20'
L105	N 00°06'28" E	29.38'
L106	N 45°08'21" E	20.38'
L107	N 67°08'07" E	22.84'
L108	S 88°33'24" E	24.04'
L109	S 82°49'38" E	42.73'
L110	N 13°25'27" E	28.79'
L111	N 54°30'28" E	11.58'
L112	S 75°31'08" E	22.77'
L113	S 30°08'30" E	12.17'
L114	S 00°01'36" E	30.84'
L115	S 34°08'30" E	17.50'
L116	S 25°31'08" E	12.80'
L117	S 10°45'27" E	12.04'
L118	S 00°06'28" W	8.32'
L119	S 60°08'28" W	36.38'
L120	N 88°53'28" W	8.77'
L121	N 30°57'45" W	16.02'
L122	N 43°20'37" W	15.26'
L123	N 58°13'28" W	22.69'
L124	N 88°53'28" W	18.97'
L125	S 63°49'28" W	17.32'
L126	S 53°28'48" W	31.86'
L127	S 45°08'28" W	18.70'
L128	S 74°18'48" W	18.12'
L129	N 74°26'48" W	23.05'
L130	N 24°13'28" W	23.34'
L131	N 32°01'12" W	30.63'

DRAINAGE PIPE CHART				
PIPE	SIZE (IN.)	TYPE OF PIPE	LENGTH (FT.)	SLOPE (%)
A	24"	GRCP	18'	1.44%
B	24"	GRCP	42'	1.00%
C	24"	GRCP	120'	0.41%
D	24"	GRCP	102'	0.42%
E	30"	GRCP	103'	0.31%
F	30"	GRCP	100'	0.11%
K	24"	GRCP	360'	0.41%
L	24"	GRCP	24'	0.84%
O	18"	GRCP	45'	0.36%
P	18"	GRCP	43'	0.33%

NOTES:

1. ANYTHING SHOWN OUTSIDE THE DEFINED BOUNDARY OF THIS PLAT IS FOR DESCRIPTIVE PURPOSES ONLY.
2. AREA DETERMINED BY COORDINATE (CNS) METHOD.
3. THE PUBLIC RECORDS REFERENCED ON THIS PLAT ARE ONLY THOSE USED AND NECESSARY FOR THE ESTABLISHMENT OF THE BOUNDARY OF THIS PROPERTY. THEY ARE NOT AND DO NOT CONSTITUTE A TITLE SEARCH.
4. PROPERTY IS LOCATED IN FLOOD ZONE X (OUTSIDE THE 500 YEAR FLOOD PLAIN) AND FLOOD ZONE X SHADED (INSIDE THE 500 YEAR FLOOD PLAIN) AS SCALED FROM FIRM PANEL NO. 45019C0511J REVISED NOVEMBER 17, 2004.
5. ELEVATIONS ARE BASED ON NAVD 1929.
6. BEARINGS & COORDINATES ARE BASED ON SOUTH CAROLINA STATE PLANE NAD 83. (DISTANCES ARE GROUND DISTANCES)
7. WETLANDS SHOWN WERE TAKEN FROM A PLAT BY LANDRETH SURVEYING, INC. DATED JUNE 26, 2006 AND LAST UPDATED ON OCTOBER 22, 2007.
8. DHEC HAS ISSUED A PERMIT (ONE: SCR10R084) FOR THE DISTURBANCE OF 2.5 AC OF TMS# 424-00-00-001 FOR SITE PREPARATION INCLUDING THE FILLING OF 0.03 AC OF ISOLATED NON-JURISDICTIONAL WETLANDS.
9. BUILDING SETBACKS SHOULD BE CONFIRMED BY THE CITY OF CHARLESTON BEFORE ANY DESIGN OR CONSTRUCTION.
10. TREE SAVE AREAS ARE REQUIRED TO BE PRESERVED PER CONDITIONS BY BZA ON 12/7/2011.
11. THE MATCHED DRAINAGE EASEMENTS SHOWN ARE DEDICATED TO THE CITY OF CHARLESTON FOR ACCESS TO AND MAINTENANCE OF THE STORMWATER SYSTEM.
12. THE SEWER EASEMENTS SHOWN ARE DEDICATED TO THE JAMES ISLAND PUBLIC SERVICE DISTRICT FOR THE PURPOSE OF OPERATION AND MAINTENANCE OF GRAVITY SEWER MAINS.
13. THE WATER EASEMENTS SHOWN ARE DEDICATED TO THE JAMES ISLAND PUBLIC SERVICE DISTRICT FOR THE PURPOSE OF OPERATION AND MAINTENANCE OF WATER MAINS.
14. THE ACCESS EASEMENT SHOWN IS DEDICATED TO THE CITY OF CHARLESTON FOR ACCESS TO THE STORMWATER MANAGEMENT FACILITY. THE LONG-TERM MAINTENANCE AND OPERATION OF THE STORMWATER MANAGEMENT FACILITY IS THE RESPONSIBILITY OF THE OWNER(S) OF THE PARCEL(S) AND SHALL BE COMPLETED IN ACCORDANCE WITH THE COVENANTS FOR PERMANENT MAINTENANCE OF STORMWATER FACILITIES COMPLETED FOR THIS SUBDIVISION.

CURVE TABLE						
CURVE	RADIUS	LENGTH	TANGENT	CHORD	BEARING	DELTA
C1	15.00'	23.56'	15.00'	21.22'	S 43°28'44" W	90°00'27"

REFERENCES:

PLAT BOOK	PAGE	RECORDED
512	0261	12.28.2012
DA	078	11.10.1992
DA	055	08.16.1990
AK	104	04.07.1978
AX	118	08.05.1983
AW	144	07.27.1979
AY	084	10.10.1983
S	035	12.23.1964

UNRECORDED PLAT BY
FREDERICK E. LANDRETH
DATED: 06/26/2006
REVISED: 10/22/2007

DHEC DCRM PERMIT # SCR10R084

TMS #424-00-00-001

LEGEND:

- IRON FOUND, AS DESCRIBED
- 1/2" REBAR, SET
- WATER METER
- REDUCER
- SANITARY SEWER MANHOLE
- POWER POLE
- CATCH BASIN
- WATER VALVE
- FIRE HYDRANT
- JUNCTION BOX
- ELECTRIC BOX (AS DESIGNATED)

- COMMUNICATION LINE
- FIBER OPTIC LINE
- OVERHEAD POWERLINE
- GAS LINE
- SEWER LINE
- WATERLINE
- DRAINAGE LINE

TREE LEGEND:

P	=	PINE
M	=	MAPLE
BG	=	BLACKGUM
G	=	GUM
O	=	OAK
WO	=	WATEROAK
LAO	=	LAUREL OAK
LO	=	LIVE OAK
MAG	=	MAGNOLIA
POP	=	POPLAR
CH	=	CHERRY
BA	=	BAY
JU	=	JUNIPER
CD	=	CHINADERRY
HA	=	HACKBERRY
LA	=	LAUREL
RB	=	RIVER BIRCH
CLA	=	CHERRY LAUREL
HO	=	HOLLY
P	=	PINE
TA	=	TALLOW
BO	=	BLACK OAK

NO.	DATE	DESCRIPTION	BY

SWA surveying LLC
1035-B Jenkins Road
Charleston, SC 29407
(843) 795-9330

A TREE AND TOPOGRAPHICAL SURVEY OF PARCEL 3

TMS #424-00-00-001

OWNED BY JLW MAYBANK II, LLC
LOCATED IN THE CITY OF CHARLESTON
CHARLESTON COUNTY, SOUTH CAROLINA

SOUTH CAROLINA REGISTERED LAND SURVEYOR 16115 JOHN F. BYRANT

SOUTH CAROLINA SEASON WATERSIDE & ASSOCIATES SURVEYING LLC CERTIFICATE OF AUTHORIZATION

DATE:	6/24/2015
DRAWN:	JKB
CHECK:	PRB
CO:	JP
JOB:	15109
DWG:	TT.dwg
SHEET:	3 OF 3

4.3 MASTER PLAN

4.3.1 Conceptual Site Master Plan and Detail

NOTES:

1. TMS# 424-00-00-001
2. TOTAL ACREAGE 10.57 ACRES
3. ZONING: PUD
4. PROPOSED USE: NEW MULTI-FAMILY COMPLEX, COMMERCIAL USES, & CONSERVATION/OPEN SPACE
5. BUFFER REQUIREMENTS:
   5.1 BUFFER ALONG MAYBANK: 0'
   5.2. BUFFER (PROMENADE VISTA): PER SECTION 54-343
   5.3. BUFFER SIDE (JAMES ISLAND SHOPPING CENTER): 10', TYPE B
   5.4. BUFFER ALONG RESIDENTIAL DR-3F AND SR-1: UNDISTURBED 25', AUGMENTED BY STAFF RECOMMENDATION
6. RESIDENTIAL DENSITY:
   6.1. 279 DWELLING UNITS MAXIMUM, 272 MINIMUM
7. PARKING: REQUIRED PARKING: 1.40 SPACES PER UNIT
8. OPEN SPACE REQUIRED:
   8.1. 20% OF THE PARCEL - 2.11 AC
   8.2. 25% OF THE 20% OPEN SPACE TO BE USABLE - 0.529 AC

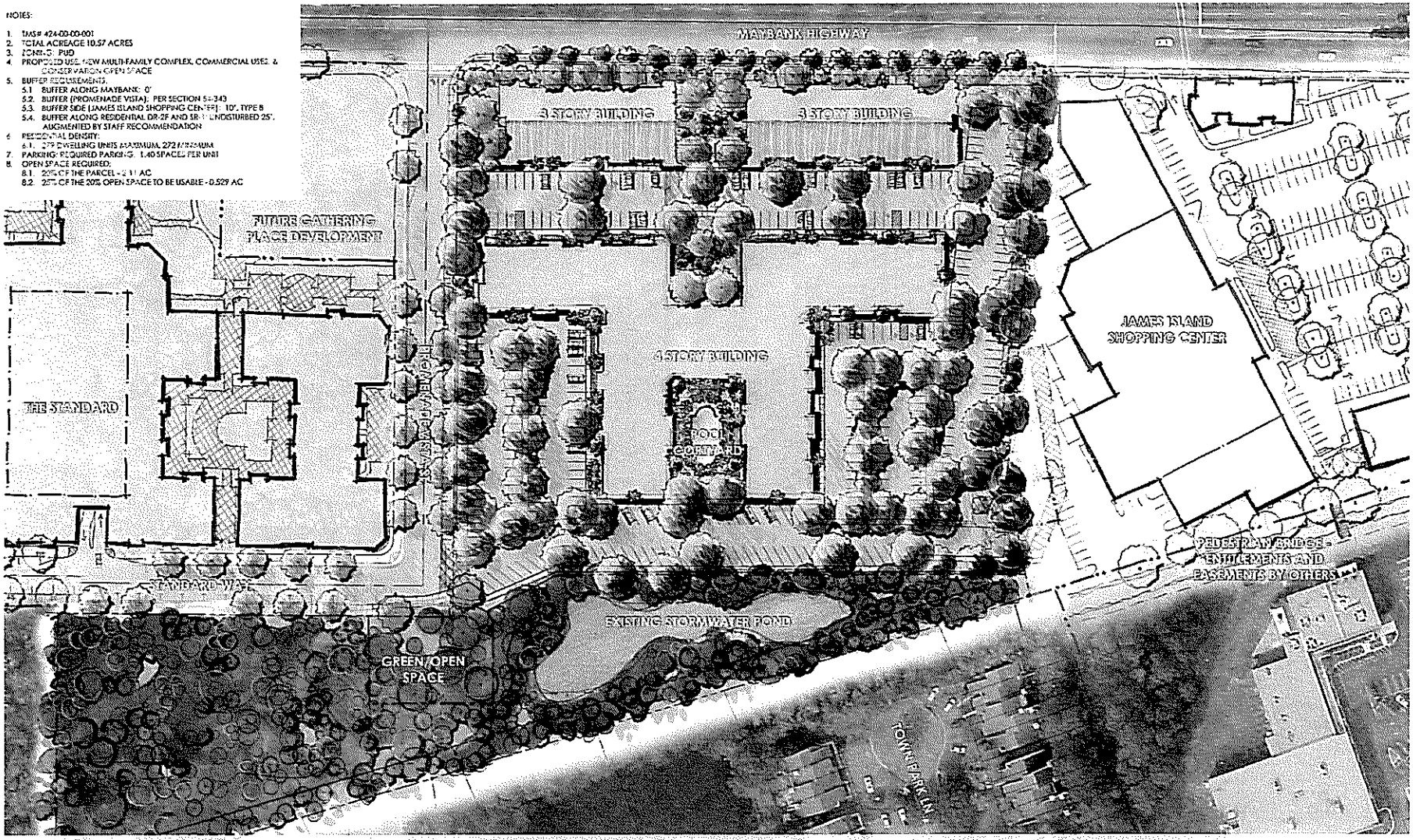

CONCEPTUAL SITE MASTER PLAN

MAYBANK PLANNED UNIT DEVELOPMENT

SCALE: 1"=40'-0"

JAMES ISLAND, SC

AUGUST 2016

Stantec dwell

CORE PROPERTY CAPITAL BELLO GARRIS ARCHITECTS

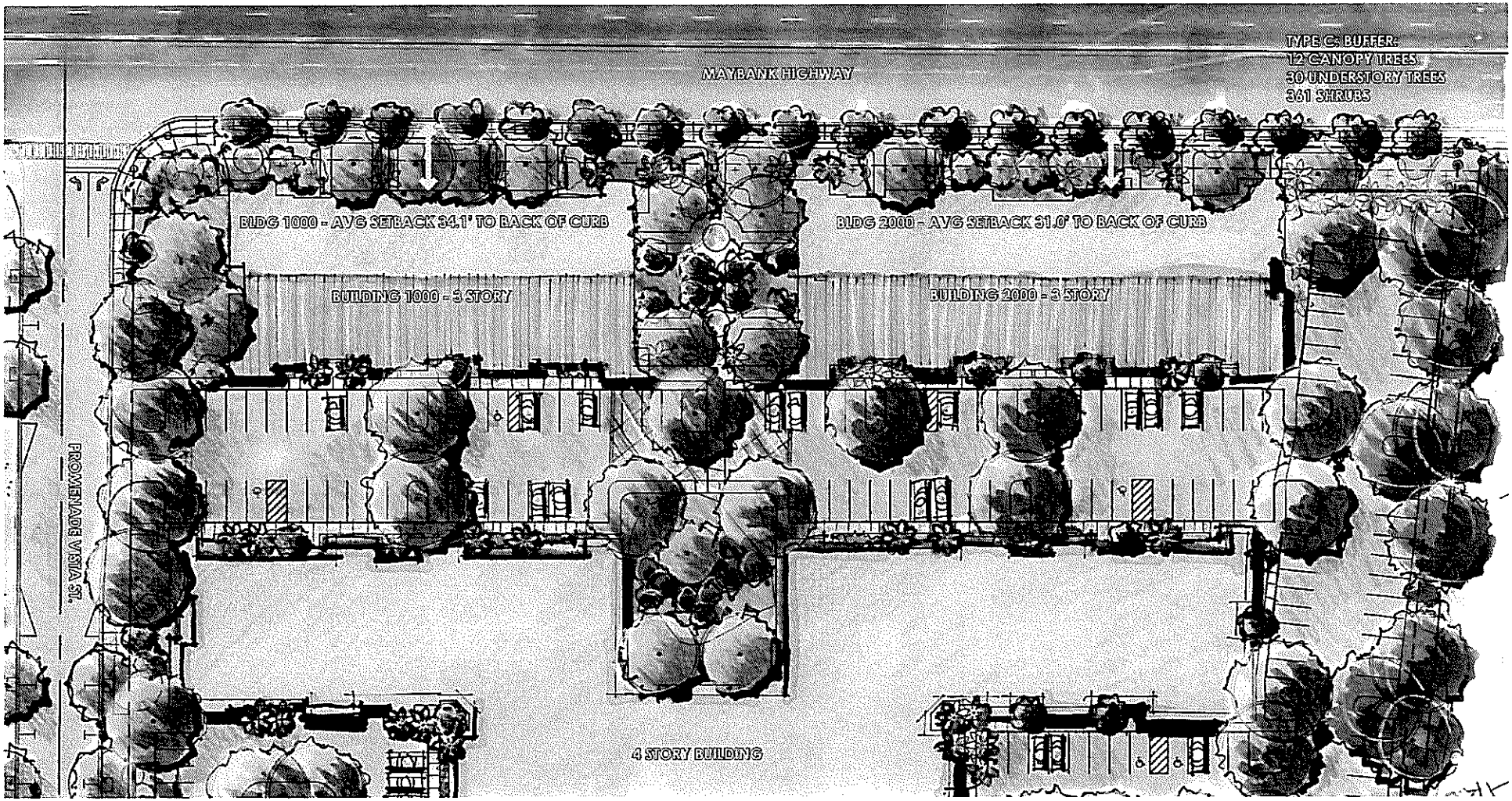

NOTE: PORCHES AND OVERHANGS MAY ENCROACH INTO THE SETBACK AREA

FRONTAGE EXHIBIT

MAYBANK PLANNED UNIT DEVELOPMENT

JAMES ISLAND, SC

AUGUST 2016

Stantec dwell design studio

CORE PROPERTY CAPITAL BELLO GARRIS ARCHITECTS

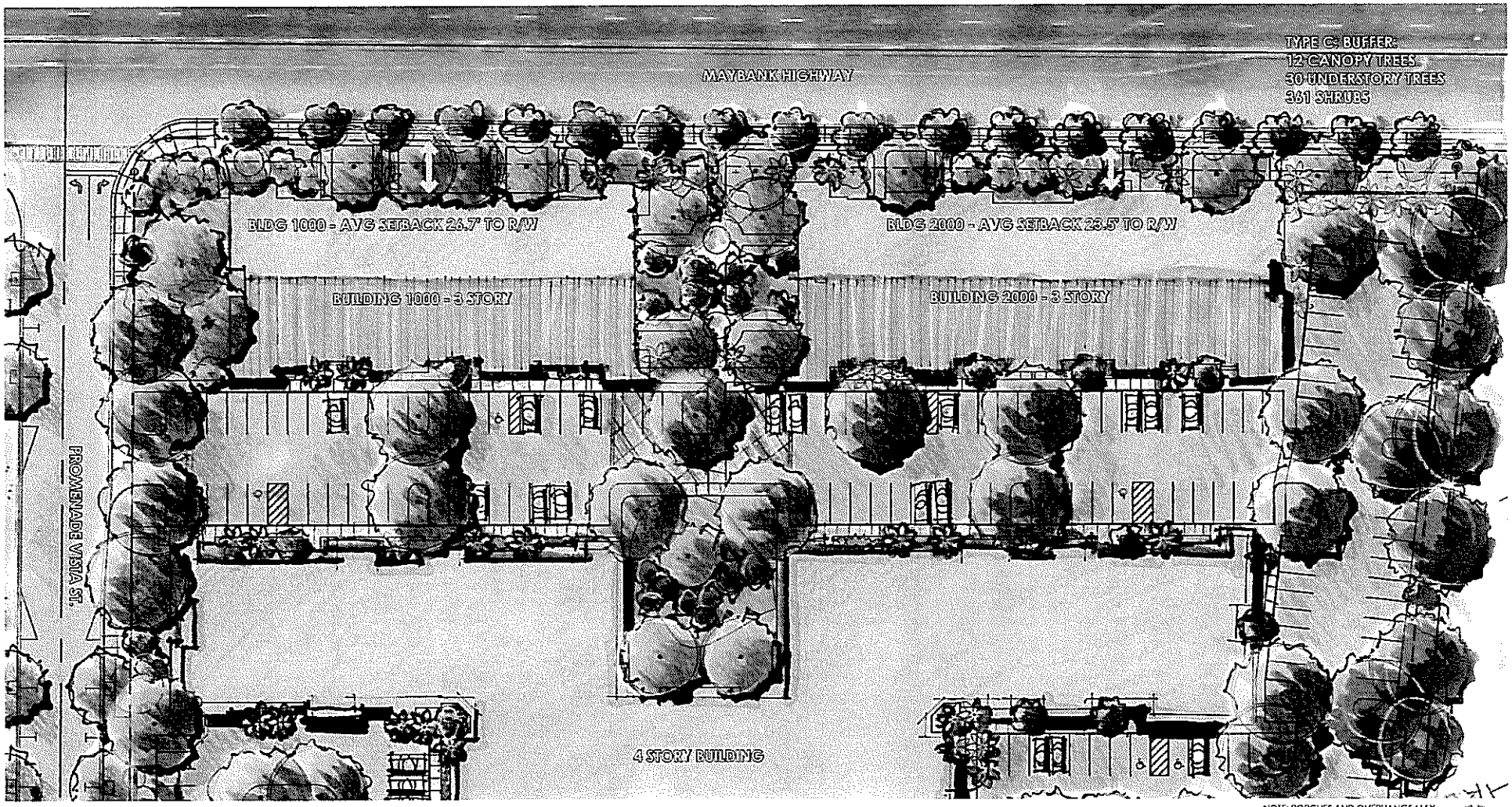

NOTE: PORCHES AND OVERHANGS MAY ENCROACH INTO THE SETBACK AREA

FRONTAGE EXHIBIT

MAYBANK PLANNED UNIT DEVELOPMENT

JAMES ISLAND, SC

AUGUST 2016

Stantec dwell design studio

CORE PROPERTY CAPITAL BELLO GARRIS ARCHITECTS

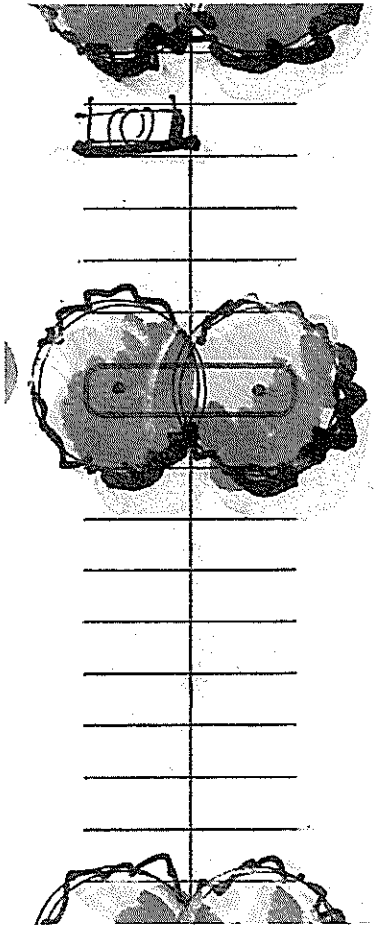

PREVIOUS PARKING DESIGN

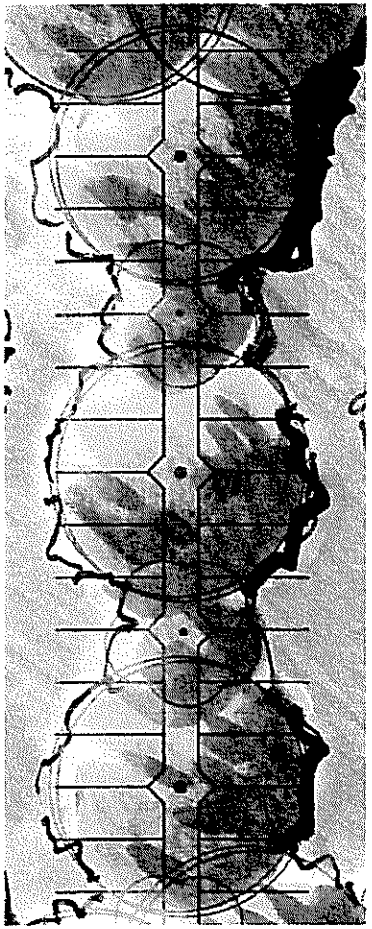

PROPOSED PARKING DESIGN

PARKING LANDSCAPE EXHIBIT

MAYBANK PLANNED UNIT DEVELOPMENT

JAMES ISLAND, SC

AUGUST 2016

Stantec dwell design studio

CORE PROPERTY CAPITAL BELLO | GARRIS ARCHITECTS

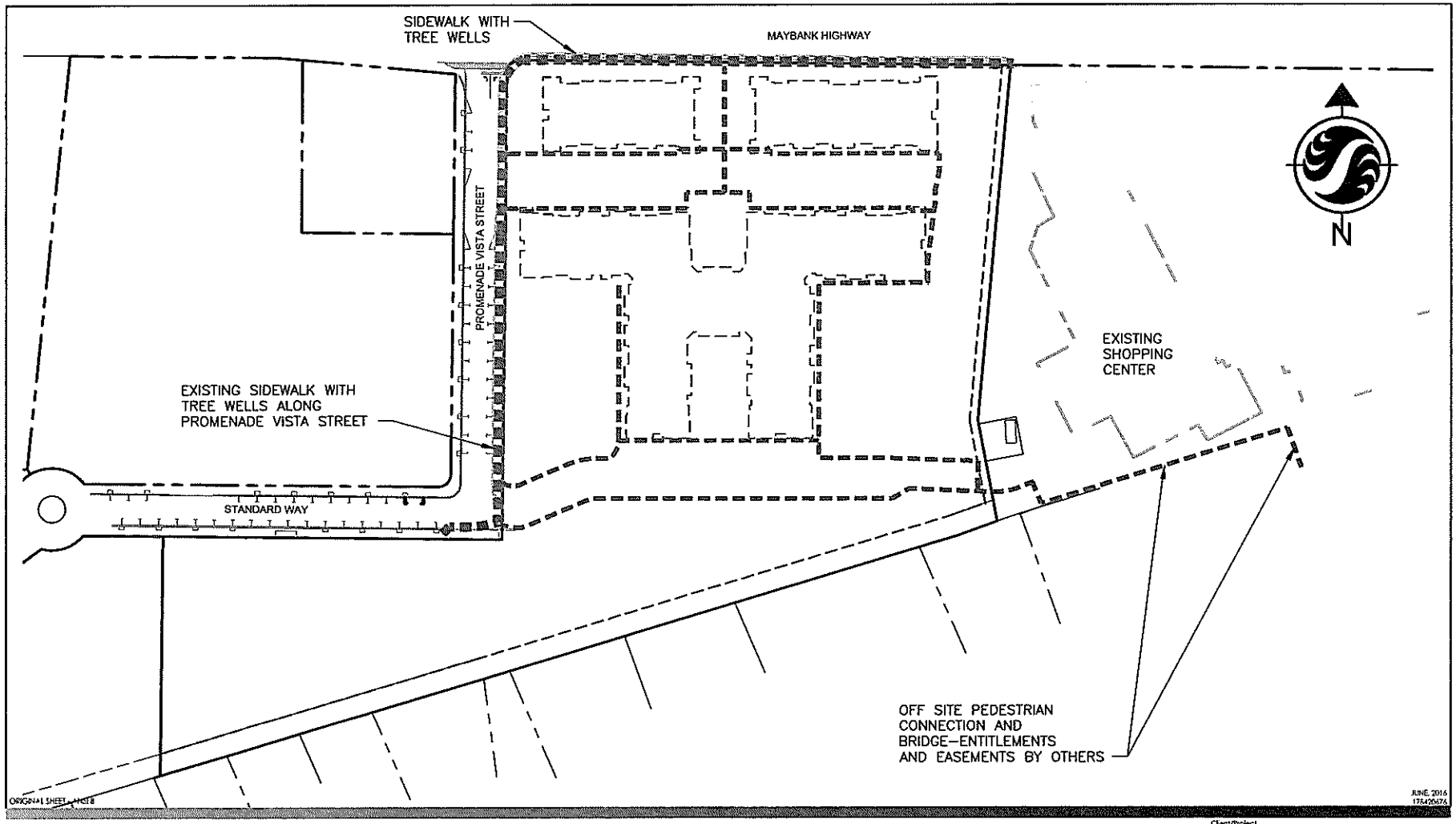

Stantec

4969 Centre Pointe Dr, Suite 200
North Charleston, SC 29418

Legend

PEDESTRIAN CONNECTION

Notes

Client/Project
CORE PROPOERTY CAPITAL
MAYBANK MULTI-FAMILY
CITY OF CHARLESTON

Figure No.
4.0

Title
PEDESTRIAN CONNECTION EXHIBIT

4.3.2 Zoning Districts and Open Space

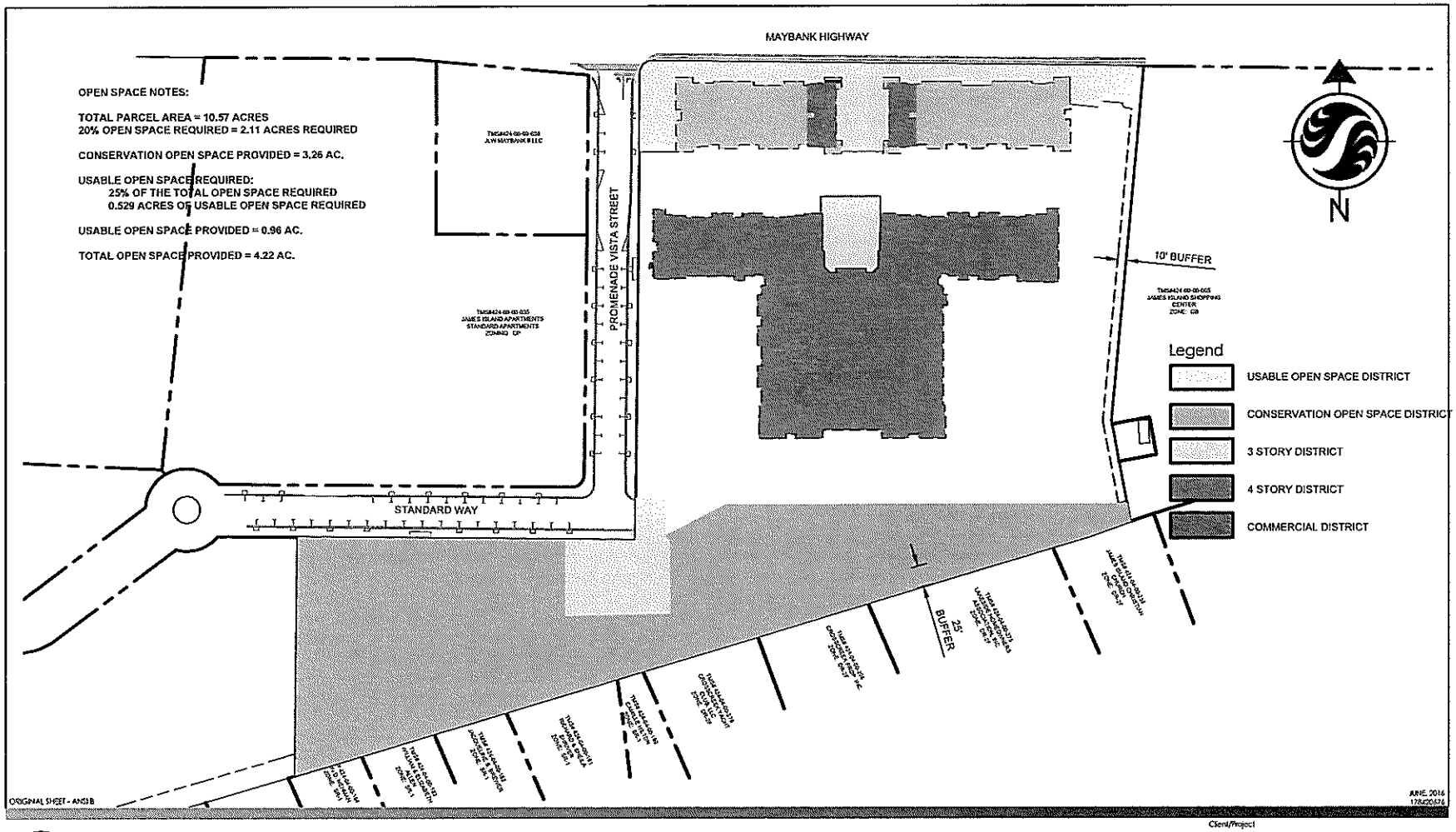

V:\1784\active\178420576-maybank\urban land\drawings\20160714_PUD_EXHIBIT\PUD-rev.dwg
2016/07/18 10:38 AM By: Chase, Erica

Stantec

4969 Centre Pointe Dr, Suite 200
North Charleston, SC 29418

Client/Project
CORE PROPOERTY CAPITAL
MAYBANK MULTI-FAMILY
CITY OF CHARLESTON

Figure No.
2.0

Title
ZONING DISTRICT AND OPEN SPACE EXHIBIT

5. TRAFFIC IMPACT ANALYSIS

Traffic Impact Analysis. Because of the reduction in developable residential units and commercial space effectuated by the Maybank PUD as compared to the allowable density the Property's existing Gathering Place zoning permits, the Department of Planning, Preservation and Sustainability has determined, during the PUD Pre-Application Plan review, that the potential impact the Maybank PUD is anticipated to have substantially less impact on the existing transportation infrastructure than the entitled Gathering Place development would have. Technical Review Committee requirements for traffic impact studies for any modification to the Site Plan and Master Plan as to increases in the buildable density and uses shall still apply. A copy of the traffic impact analysis is attached hereto and incorporated herein by reference.

Table of Contents

EXECUTIVE SUMMARY ..... **III**

1.0 INTRODUCTION **1**
1.1 PROJECT BACKGROUND 1
1.2 EXISTING ROADWAY CONDITIONS 4

2.0 DRIVEWAY SPACING REVIEW **5**

3.0 PROJECT TRAFFIC **6**
3.1 PROPOSED LAND USES 6
3.2 TRIP GENERATION ESTIMATES 6
3.3 MODAL SPLIT 6
3.4 TRIP DISTRIBUTION & ASSIGNMENT 7

4.0 TRAFFIC VOLUME DEVELOPMENT **10**
4.1 EXISTING TRAFFIC VOLUMES 10
4.2 FUTURE TRAFFIC VOLUME PROJECTIONS 12
4.2.1 Historical Growth Rates 12
4.2.2 Fully Entitled Development Traffic Volume Projections 12
4.2.3 2019 No Build Traffic Volumes 12
4.2.4 2019 Build Traffic Volumes 14

5.0 TRAFFIC IMPACT ANALYSIS **16**
5.1 INTERSECTION LOS ANALYSIS 16
5.2 TURN LANE ANALYSIS 20

6.0 SUMMARY OF FINDINGS AND RECOMMENDATIONS **23**

List of Tables

Table 3.1 – Trip Generation Estimates 6
Table 5.1 – *HCM 2010* LOS Criteria for Unsignalized & Signalized Intersections 16
Table 5.2 – Signalized Intersection Analysis Results 17
Table 5.3 – Unsignalized Intersection Analysis Results 18

List of Figures

Exhibit 1.1 – Project Location Map 2
Exhibit 1.2 – Site Plan 3
Exhibit 3.1 – Peak-Hour Project Traffic Volumes 8
Exhibit 3.2 – PM Peak-Hour Project Traffic Volumes 9
Exhibit 4.1 – 2016 Existing Peak Hour Traffic Volumes 11
Exhibit 4.2 – 2019 No Build Peak Hour Traffic Volumes 13
Exhibit 4.3 – 2019 Build Peak Hour Traffic Volumes 15

List of Appendices

A) Trip Generation Worksheet

B) Traffic Volume Data

C) Traffic Volume Development Worksheets

D) Analysis Worksheets (2016 Existing Conditions)

E) Analysis Worksheets (2019 No Build Conditions)

F) Analysis Worksheets (2019 Build Conditions)

G) Turn Lane Analysis Worksheets

Executive Summary

A traffic impact analysis was conducted for the Maybank Planned Development in accordance with City of Charleston and SCDOT guidelines. The proposed Maybank Planned Development is located on the south side of SC 700/Maybank Highway between Fleming Road and Wappoo Creek Drive in the City of Charleston, South Carolina and is proposed to consist of 278 apartments and 7,500 square feet of retail.

Access to the development will be provided through one existing full access driveway along SC 700/Maybank Highway and one existing full access driveway along Fleming Road. These driveways will be shared with the adjacent development, The Standard.

The results of the signalized intersection analyses indicate that the study intersections (see page 1 for study intersections) currently operate and are expected to continue to operate at an acceptable LOS with consideration of the Maybank Planned Development, with one exception. The SC 700/Maybank Highway/Country Club Drive & SC 171/Folly Road intersection currently experiences LOS E conditions during the PM peak hour and is anticipated to experience LOS F conditions in the future, with or without the project. Project traffic is projected to be 1.8% of the total intersection traffic for the 2019 Build conditions. Due to the fact that the intersection is projected to operate at undesirable conditions and the minimal impact of the project traffic, no improvements are recommended at this time.

The results of the unsignalized intersection analyses show the SC 700/Maybank Highway approaches to the intersections with Fleming Road and the Project Driveway currently experience free-flow LOS A conditions and are expected to continue to experience free-flow LOS A conditions with the development of the project site. The northbound approach of the SC 700/Maybank Highway & Fleming Road intersection currently experiences LOS E conditions during the AM peak hour and is anticipated to experience LOS F conditions in the future with or without consideration of the Maybank Planned Development. The northbound approach of the SC 700/Maybank Highway & Project Driveway intersection is projected to experience undesirable delay in the future with the development of the project site. Future signalization of the SC 700/Maybank Highway & Fleming Road intersection would mitigate the undesirable condition at both intersections. Therefore, it is recommended that a signal warrant analysis be performed to determine if signal warrants would be met at the intersection of SC 700/Maybank Highway & Fleming Road upon completion of the Maybank Planned Development and The Standard.

Based on the *Highway Design Manual* considerations for the project driveways, exclusive ingress turn lanes along Fleming Road at the project driveway are not recommended at this time. The existing right-turn lane along SC 700/Maybank Highway will serve the eastbound right-turn movement at the project driveway and the existing two-way left-turn lane along SC 700/Maybank Highway will serve the westbound left-turn movement at the project driveway.

1.0 Introduction

The purpose of this report is to document a traffic impact analysis for the Maybank Planned Development in accordance with City of Charleston and SCDOT guidelines. This report summarizes the procedures and findings of the traffic impact analysis.

1.1 PROJECT BACKGROUND

The proposed Maybank Planned Development is located on the south side of SC 700/Maybank Highway between Fleming Road and Wappoo Creek Drive in the City of Charleston, South Carolina and is proposed to consist of 278 apartments and 7,500 square feet of retail. Access to the development will be provided through one existing full access driveway along SC 700/Maybank Highway and one existing full access driveway along Fleming Road. These driveways will be shared with the adjacent development, The Standard.

The traffic impact analysis considers the weekday AM peak hour (between 7:00 AM and 9:00 AM) and the weekday PM peak hour (between 4:00 PM and 6:00 PM) as the study time frames. Based upon discussions with city staff, the extent of the existing roadway network to be studied consists of the five (5) intersections of:

1) SC 700/Maybank Highway & Fleming Road;
2) SC 700/Maybank Highway & Wappoo Creek Drive;
3) SC 700/Maybank Highway & Old Folly Road;
4) SC 700/Maybank Highway/Country Club Drive & SC 171/Folly Road; and
5) Old Folly Road & SC 171/Folly Road.

The buildout date for the proposed development is anticipated to be 2019; therefore, future-year 2019 conditions were analyzed as the Build scenario. Exhibit 1.1 illustrates the location of the project site, including the adjacent public roadway network, and Exhibit 1.2 illustrates a site plan of the proposed development.

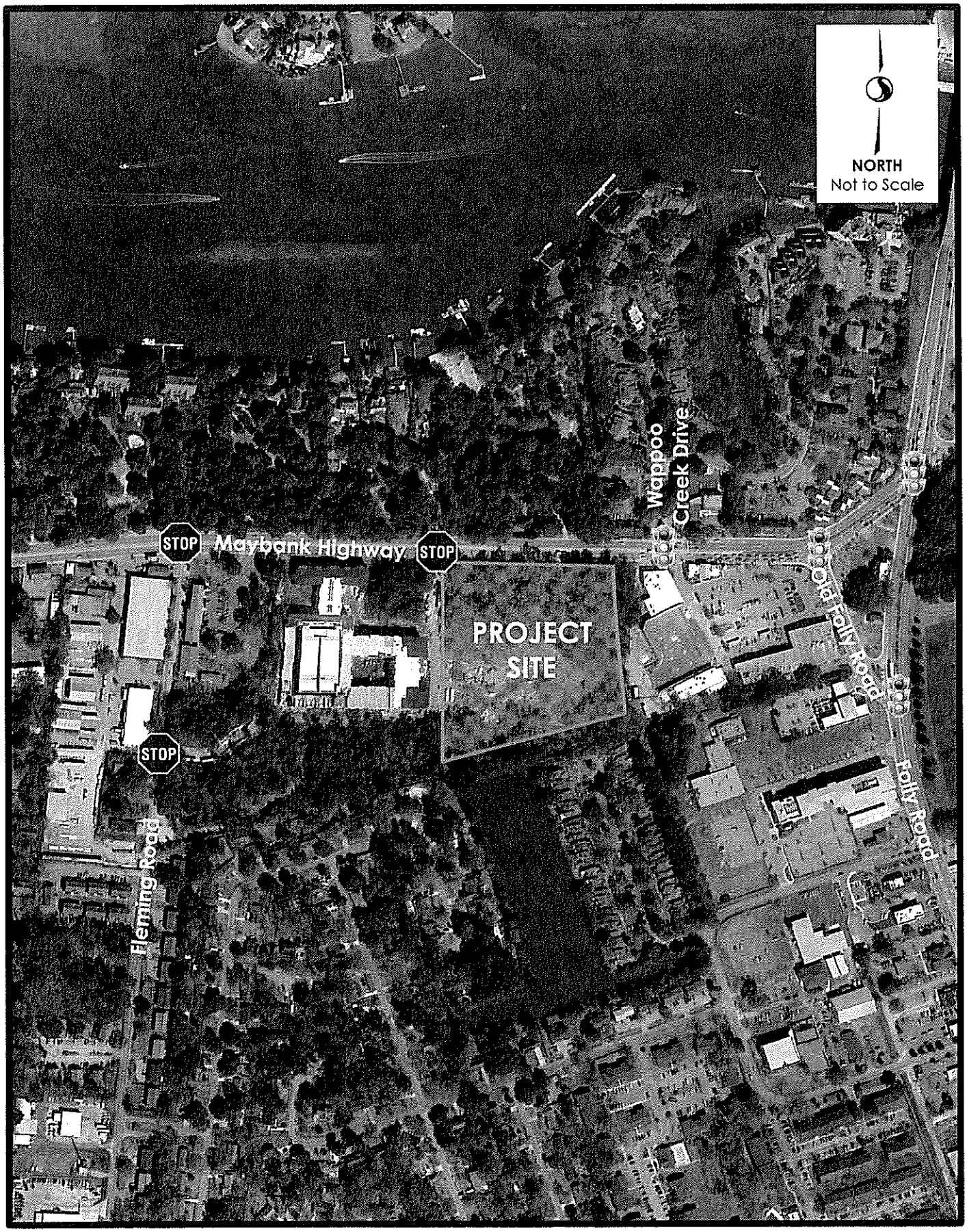

Stantec

Maybank Residential Development - Traffic Impact Analysis

Exhibit 1.1 - Project Location Map - PAGE 2

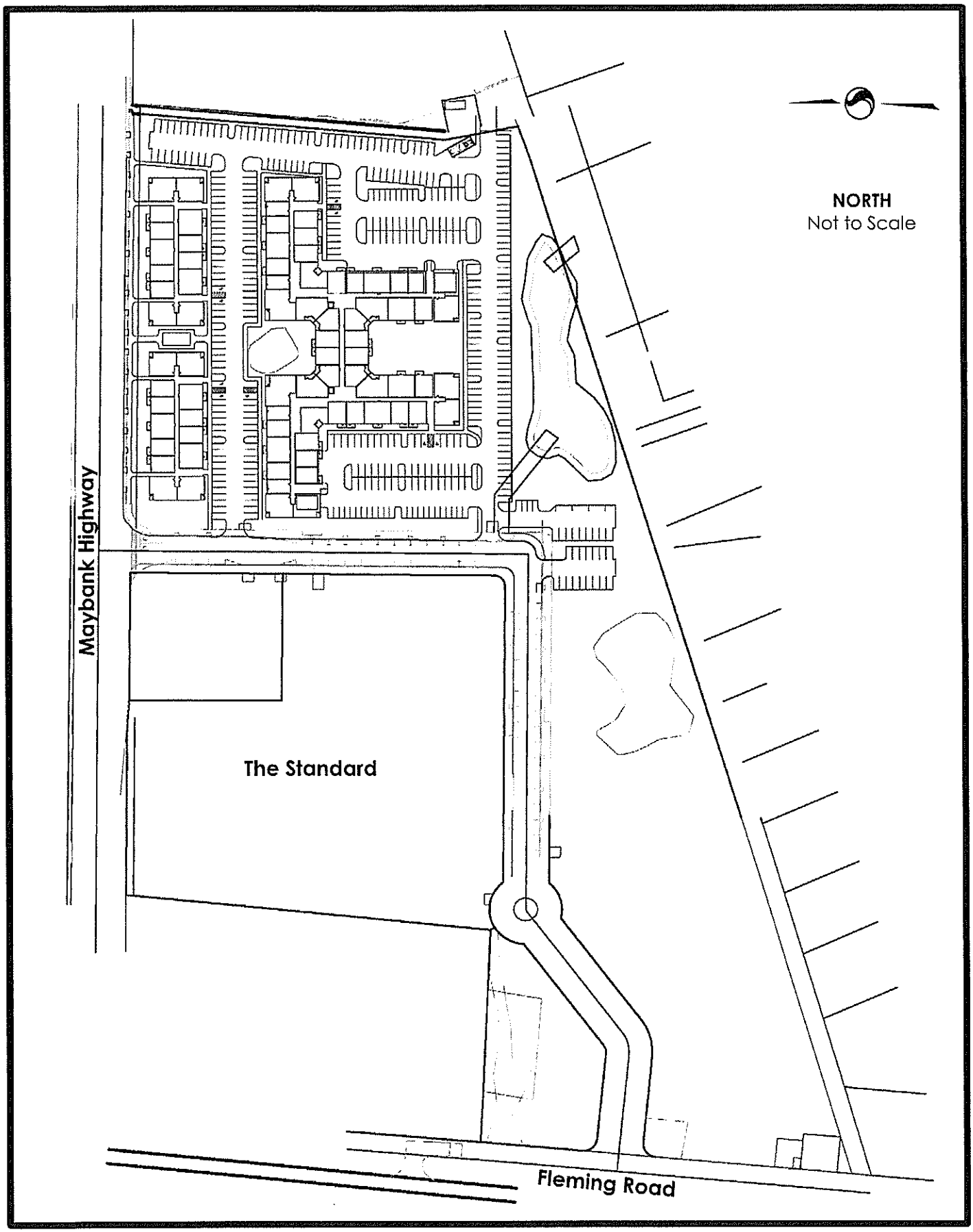
NORTH
Not to Scale
Maybank Highway
The Standard
Fleming Road

1.2 EXISTING ROADWAY CONDITIONS

SC 700/Maybank Highway is a five-lane arterial, with a two-way left-turn lane, which primarily serves residential and commercial land uses. The posted speed limit is 40 mph and the 2015 AADT was 23,800 vpd. Based upon existing turning movement counts, the percentage of heavy vehicles along SC 700/Maybank Highway is 1%.

Fleming Road is a two-lane local road that primarily serves residential land uses. The posted speed limit is 35 mph and the 2015 AADT was 2,300 vpd.

Old Folly Road is a two-lane arterial, with turn lanes at the intersections with SC 700/Maybank Highway and SC 171/Folly Road, which serves commercial land uses. Based upon existing turning movement counts, the percentage of heavy vehicles along Old Folly Road is 1%.

SC 171/Folly Road is a five-lane arterial, with a two-way left-turn lane and turn lanes at the study intersections, which primarily serves commercial land uses. The posted speed limit is 40 mph and the 2015 AADT was 29,800 vpd. Based upon existing turning movement counts, the percentage of heavy vehicles along SC 171/Folly Road is less than 1%.

2.0 Driveway Spacing Review

Access to the development will be provided through one existing full access driveway along SC 700/Maybank Highway and one existing full access driveway along Fleming Road. These driveways will be shared with the adjacent development, The Standard.

Due to the fact that the project will access existing driveways, no additional improvements are recommended at this time.

3.0 Project Traffic

Project traffic used in this analysis is defined as the vehicle trips expected to be generated by the Maybank Planned Development. These trips were distributed and assigned throughout the study roadway network.

3.1 PROPOSED LAND USES

The Maybank Planned Development consists of 278 apartments and 7,500 square feet of retail. The project site is currently vacant.

3.2 TRIP GENERATION ESTIMATES

The trip generation potential for the development was estimated using information contained in ITE's *Trip Generation Manual*, 9th Edition (2012) reference. The estimates utilized land use code (LUC) 220 – Apartment and LUC 820 – Shopping Center and were developed for the weekday daily, the weekday AM peak hour of the adjacent street, and the weekday PM peak hour of the adjacent street time periods.

Due to the nature of the development, internal and pass-by capture was also considered in the trip generation estimates. Internal capture considers interaction between multiple uses in a development and was limited to 20%. Pass-by traffic is attracted from the existing traffic volumes on adjacent roadways and reduces the new trip impacts of a retail project site. Internal and pass-by capture traffic was estimated using information contained in ITE's *Trip Generation Handbook*, 3rd Edition (2014) reference.

The trip generation estimates for the development is shown in Table 3.1 and documented in Appendix A.

Table 3.1 – Trip Generation Estimates

Land Use	ITE LUC	Scale	Daily	Weekday AM Peak Hour		Weekday PM Peak Hour	
				Enter	Exit	Enter	Exit
Apartment	220	278 DU	1,808	28	112	111	60
Shopping Center	820	7,500 sf	1,261	20	12	51	55
		Gross Trips:	3,069	48	124	162	115
		-Internal Capture:	-452	-2	-2	-19	-19
		-Pass-by Capture Trips:	-352	-5	-5	-15	-15
		New, External Trips:	**2,265**	**41**	**117**	**128**	**81**

3.3 MODAL SPLIT

The modal split is the percentage of trips using a particular mode of travel (such as vehicles, bicycles, walking, and telecommuting). With the proximity of the Maybank Planned site to other areas on James Island, there is a great opportunity to provide development within walking and bicycling distance to other

areas on James Island. Based upon the 2014 US Census Bureau data for the City of Charleston, approximately 77% of people drove alone to work, with 23% carpooling, walking, biking, or telecommuting.

Based upon the location of the project, it is expected that residents of the Maybank Planned Development would follow these percentages, reducing vehicle demand by 23%. However, in an effort to provide a conservative analysis, a modal split for carpooling, walking, biking, and telecommuting was not considered in the traffic analysis.

3.4 TRIP DISTRIBUTION & ASSIGNMENT

New external traffic expected to be generated by the Maybank Planned Development was distributed and assigned to the roadway network based upon existing travel patterns in the area. The general distribution of new project trips was assumed to be:

- 25% to/from the west via SC 700/Maybank Highway;
- 50% to/from the north via SC 171/Folly Road; and
- 25% to/from the south via SC 171/Folly Road.

Pass-by traffic expected to be generated by the Maybank Planned Development was distributed and assigned to the roadway network based upon existing travel patterns in the area. The general distribution of pass-by project trips was assumed to be:

- 50% to/from westbound SC 700/Maybank Highway; and
- 50% to/from eastbound SC 700/Maybank Highway.

The assignment of project traffic, in terms of new and pass-by trips, is illustrated in Exhibit 3.1 for the AM peak hour and Exhibit 3.2 for the PM peak hour.

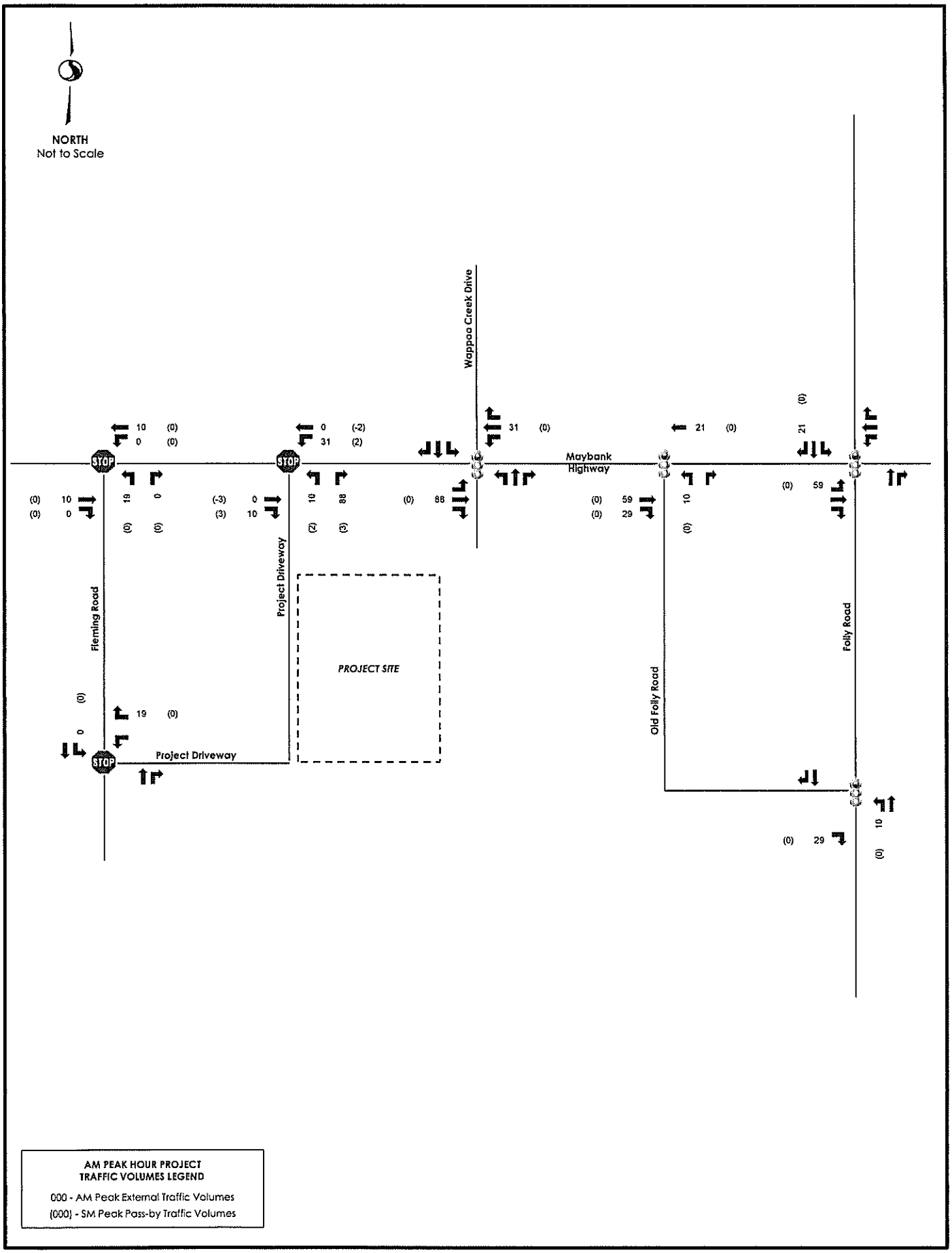

AM PEAK HOUR PROJECT TRAFFIC VOLUMES LEGEND

000 - AM Peak External Traffic Volumes

(000) - SM Peak Pass-by Traffic Volumes

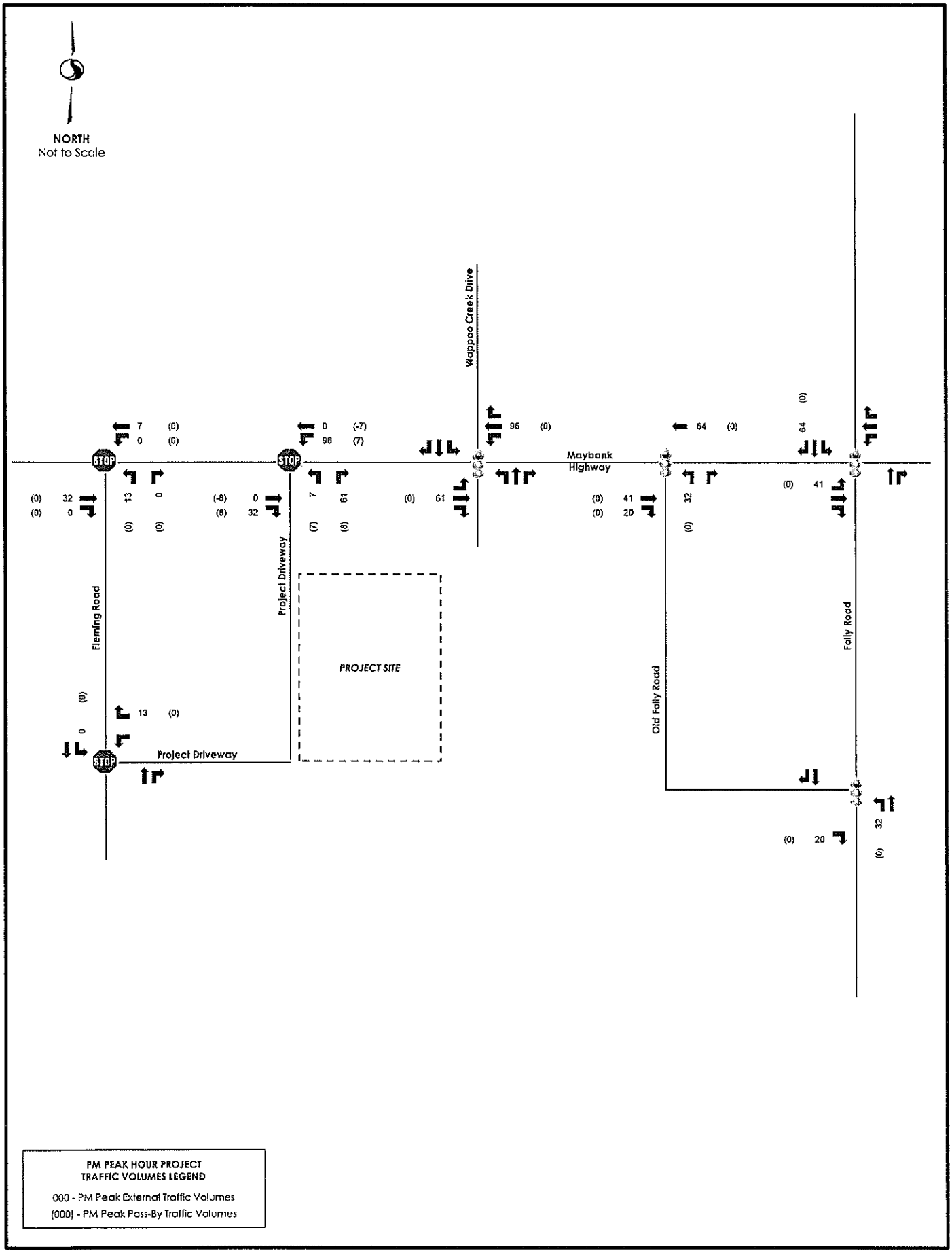

PM PEAK HOUR PROJECT TRAFFIC VOLUMES LEGEND

000 - PM Peak External Traffic Volumes

[000] - PM Peak Pass-By Traffic Volumes

4.0 Traffic Volume Development

Existing 2015 traffic volumes were collected for use in the analysis and future-year traffic volumes were developed for projected 2016 and 2019 conditions. The future-year traffic volumes consisted of existing traffic volumes adjusted by an annual growth rate, traffic volumes from fully entitled development, and projected traffic volumes of the Maybank Planned Development.

4.1 EXISTING TRAFFIC VOLUMES

Vehicle turning movement counts were conducted during the weekday AM peak period (from 7:00 AM to 9:00 AM) and the weekday PM peak period (from 4:00 PM to 6:00 PM) at the five intersections of: SC 171/Folly Road & SC 700/Maybank Highway and County Club Drive, SC 171/Folly Road & Old Folly Road, SC 700/Maybank Highway & Old Folly Road, and SC 700/Maybank Highway & Wappoo Creek Place for use in the traffic impact analysis.

The raw traffic volume counts are provided in Appendix B and the 2015 existing traffic volumes are illustrated in Exhibit 4.1 and documented in Appendix C.

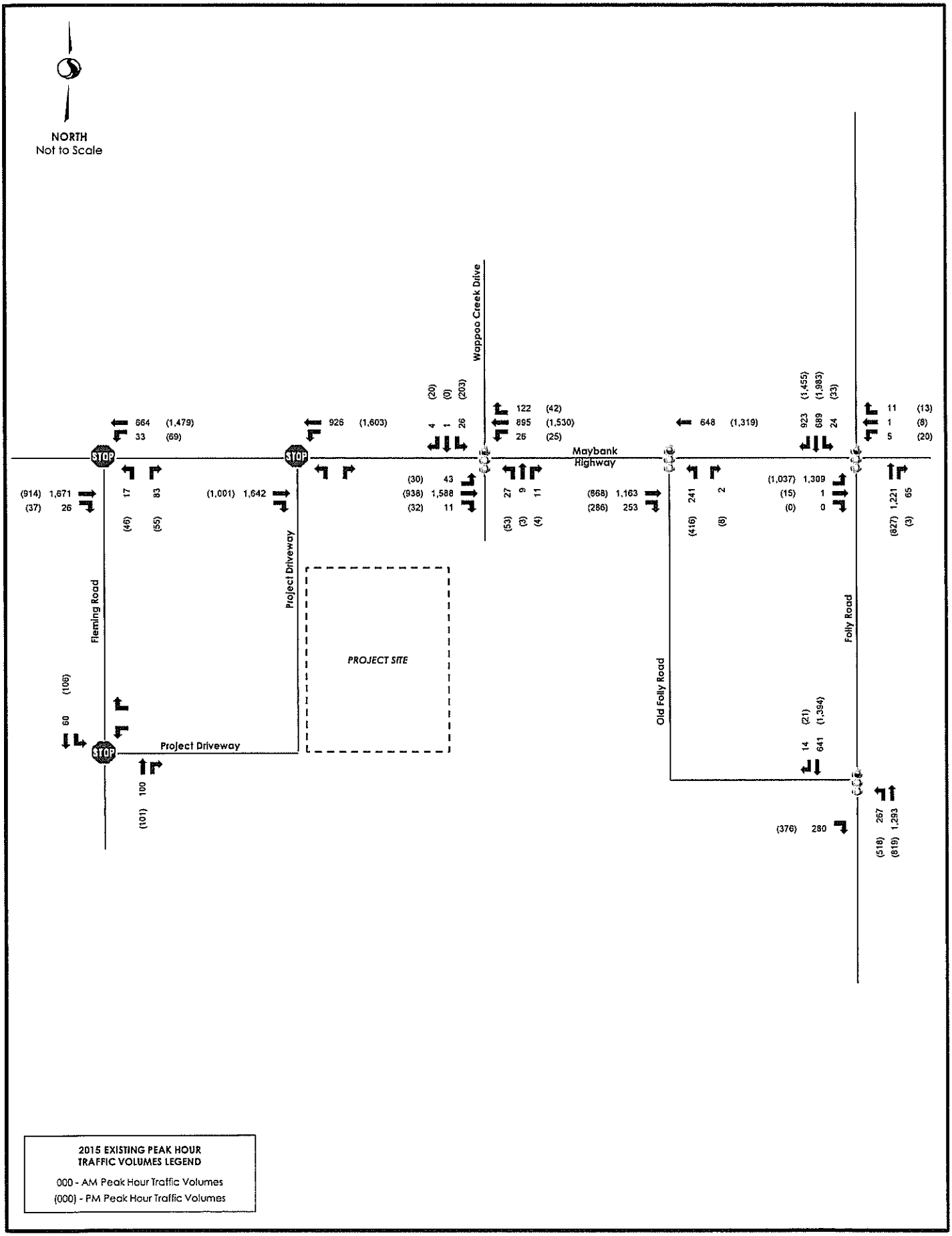

2015 EXISTING PEAK HOUR TRAFFIC VOLUMES LEGEND

000 - AM Peak Hour Traffic Volumes

(000) - PM Peak Hour Traffic Volumes

4.2 FUTURE TRAFFIC VOLUME PROJECTIONS

4.2.1 Historical Growth Rates

To develop an annual background growth rate for use in the analysis, historical count data along SC 700/Maybank Highway (SCDOT count station #271) and Fleming Road (SCDOT count station #607) was reviewed over the past five years. It was determined that the roadways have collectively experienced annual growth of less than 1.0%. Therefore, a 1.0% annual growth rate was utilized to develop 2016 Existing Conditions, 2019 No Build traffic volumes, which are illustrated in Exhibit 4.2 and documented in Appendix C.

4.2.2 Fully Entitled Development Traffic Volume Projections

In addition to the background growth rates, a fully entitled project is currently underway within the study area and was considered in the analysis. The Standard is located in the southwest quadrant of the SC 700/Maybank Highway & Fleming Road intersection, west of and adjacent to the project site. According to the traffic impact study performed for The Standard, the project is planned to consist of 284 apartment units, 10,000 square-feet of specialty retail space, and a 6,000 square-foot high-turnover sit-down restaurant. The Standard was recently under construction and was completed in late 2015. Since the development of the site is beginning to lease apartments, 100% the trips associated with this development were considered fully entitled for the purposes of this report.

4.2.3 2019 No Build Traffic Volumes

The 2019 No Build traffic volumes, which include consideration of the background growth rates and nearby development traffic volumes, are illustrated in Exhibit 4.2 and documented in Appendix C.

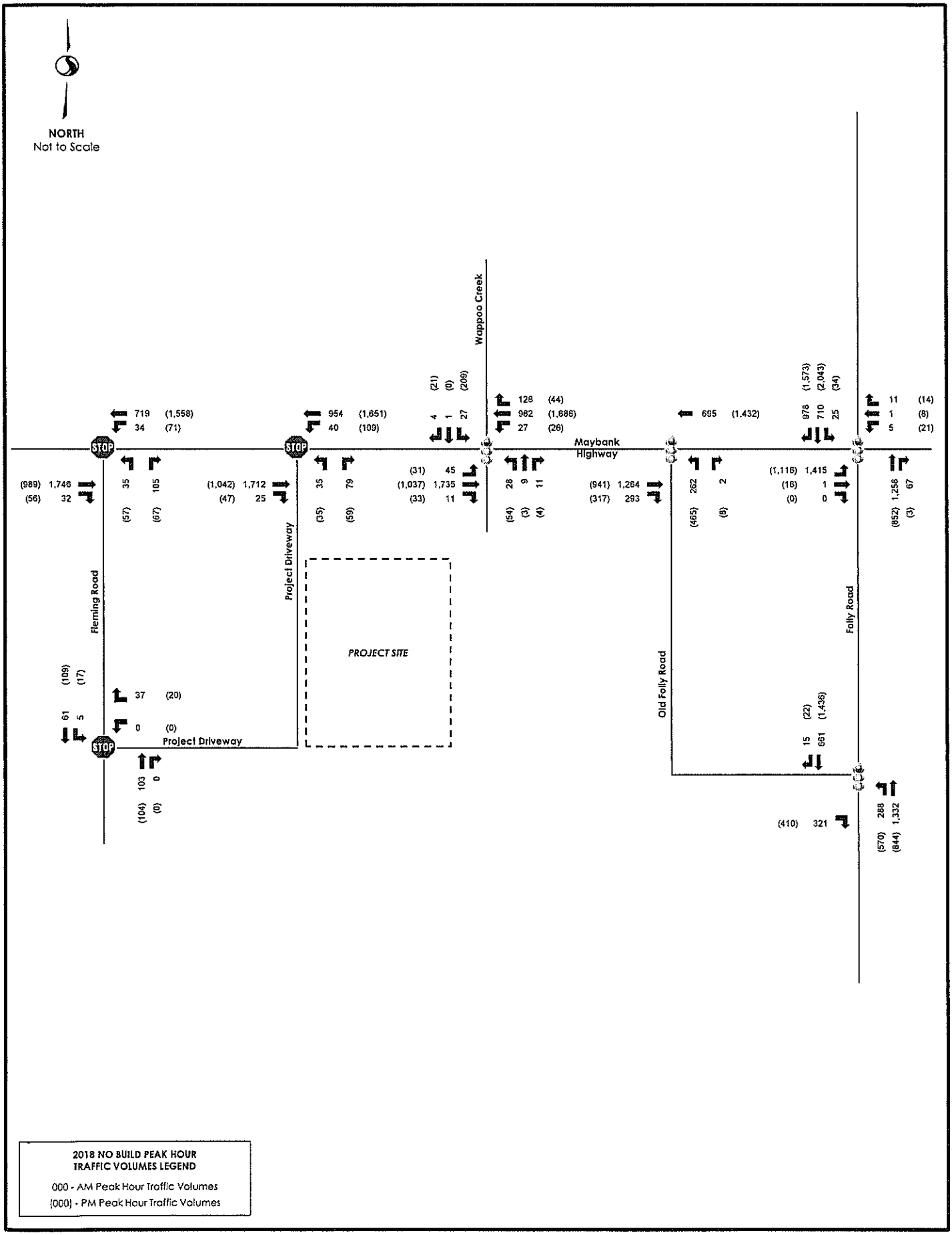
NORTH
Not to Scale
Maybank Highway
Wappoo Creek
Fleming Road
Project Driveway
Old Folly Road
Folly Road
PROJECT SITE
719 (1,558)
34 (71)
954 (1,651)
40 (109)
4 (21)
1 (0)
27 (209)
126 (44)
962 (1,686)
27 (26)
695 (1,432)
978 (1,573)
710 (2,043)
25 (34)
11 (14)
1 (8)
5 (21)
(989) 1,746
(56) 32
35 (57)
105 (67)
(1,042) 1,712
(47) 25
35 (35)
79 (59)
(31) 45
(1,037) 1,735
(33) 11
28 (54)
9 (3)
11 (4)
(941) 1,264
(317) 293
282 (465)
2 (8)
(1,116) 1,415
(16) 1
(0) 0
1,258 (852)
67 (3)
61 (109)
5 (17)
37 (20)
0 (0)
Project Driveway
103 (104)
0 (0)
15 (22)
661 (1,436)
(410) 321
288 (570)
1,332 (844)
2018 NO BUILD PEAK HOUR
TRAFFIC VOLUMES LEGEND
000 - AM Peak Hour Traffic Volumes
(000) - PM Peak Hour Traffic Volumes

4.2.4 2019 Build Traffic Volumes

The Maybank Planned Development project traffic volumes were then added to the 2019 No Build traffic volumes to develop 2019 Build traffic volumes, which are illustrated in Exhibit 4.3 and documented in Appendix C.

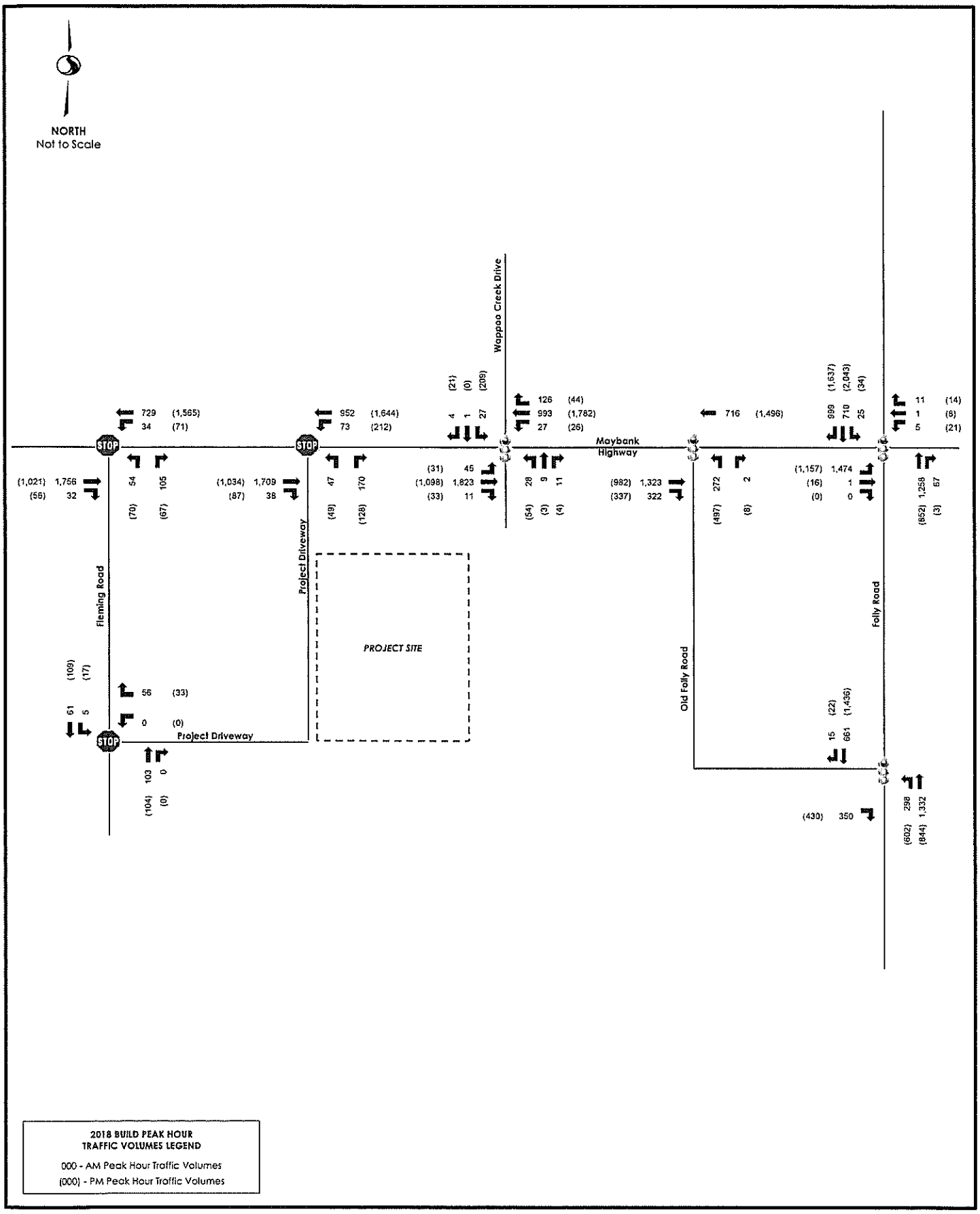
NORTH
Not to Scale
Wappoo Creek Drive
Maybank Highway
Fleming Road
Project Driveway
Old Folly Road
Folly Road
PROJECT SITE
STOP
729 (1,565)
34 (71)
952 (1,644)
73 (212)
4 (21)
1 (0)
27 (209)
126 (44)
993 (1,782)
27 (26)
716 (1,496)
999 (1,637)
710 (2,043)
25 (34)
11 (14)
1 (8)
5 (21)
(1,021) 1,756
(56) 32
54 105
(70) (67)
(1,034) 1,709
(87) 38
47 170
(49) (128)
(31) 45
(1,098) 1,823
(33) 11
28 9 11
(54) (3) (4)
(982) 1,323
(337) 322
272 2
(497) (8)
(1,157) 1,474
(16) 1
(0) 0
1,258 67
(852) (3)
61 (109)
5 (17)
56 (33)
0 (0)
103 0
(104) (0)
15 (22)
661 (1,436)
(430) 350
298 1,332
(602) (844)
2018 BUILD PEAK HOUR
TRAFFIC VOLUMES LEGEND
000 - AM Peak Hour Traffic Volumes
(000) - PM Peak Hour Traffic Volumes

5.0 Traffic Impact Analysis

Using the existing and projected traffic volumes previously discussed, intersection analyses were conducted for the study and project driveway intersections considering 2016 Existing conditions, 2019 No Build conditions, and 2019 Build conditions. This analysis was conducted using the Transportation Research Board's *Highway Capacity Manual 2010 (HCM 2010)* methodologies of the *Synchro*, Version 9 software for intersection analysis.

Intersection level of service (LOS) grades range from LOS A to LOS F, which are directly related to the level of control delay at the intersection and characterize the operational conditions of the intersection traffic flow. LOS A operations typically represent ideal, free-flow conditions where vehicles experience little to no delays, and LOS F operations typically represent poor, forced-flow (bumper-to-bumper) conditions with high vehicular delays, and are generally considered undesirable. Table 5.1 summarizes the *HCM 2010* control delay thresholds associated with each LOS grade for unsignalized and signalized intersections.

Table 5.1 – *HCM 2010* LOS Criteria for Unsignalized & Signalized Intersections

Unsignalized Intersections	
LOS	**Control Delay Per Vehicle (seconds)**
A	≤ 10
B	> 10 and ≤ 15
C	> 15 and ≤ 25
D	> 25 and ≤ 35
E	> 35 and ≤ 50
F	> 50

Signalized Intersections	
LOS	**Control Delay Per Vehicle (seconds)**
A	≤ 10
B	> 10 and ≤ 20
C	> 20 and ≤ 35
D	> 35 and ≤ 55
E	> 55 and ≤ 80
F	> 80

5.1 INTERSECTION LOS ANALYSIS

As part of the intersection analysis, SCDOT's default *Synchro* parameters were utilized. Existing peak-hour factors (PHF) were utilized in the analysis of existing and future conditions and a minimum PHF of 0.90 and maximum PHF of 0.95 being considered for future-year conditions. Existing heavy vehicle percentages, as previously discussed, were utilized in the analysis, with a minimum percentage of 2% considered. The existing lane geometry was also utilized for the analysis of existing conditions and future-year scenarios.

Using the *Synchro* software, intersection analyses were conducted for 2016 Existing conditions, 2019 No Build conditions, and 2019 Build conditions for the weekday AM peak-hour and the weekday PM peak-hour time periods.

The results of the signalized intersection analyses for existing and future-year conditions for the weekday AM and PM peak-hour time periods are summarized in Table 5.2.

Table 5.2 – Signalized Intersection Analysis Results

Intersection	Intersection Control	LOS/Delay (seconds)					
		2016 Existing Conditions		2019 No Build Conditions		2019 Build Conditions	
		AM	PM	AM	PM	AM	PM
SC 700/Maybank Highway & Wappoo Creek Drive	Signalized	A/6.5	B/12.3	A/6.9	B/15.7	A/7.0	B/15.6
SC 700/Maybank Highway & Old Folly Road	Signalized	A/7.7	A/9.6	A/9.0	B/11.0	B/10.1	B/11.8
SC 700/Maybank Highway/Country Club Drive & SC 171/Folly Road	Signalized	D/42.4	E/67.8	D/52.2	F/93.4	E/56.9	F/101.4
Old Folly Road & SC 171/Folly Road	Signalized	A/2.2	A/9.2	A/2.3	B/14.0	A/2.3	B/15.4

The results of the signalized intersection analyses indicate that the study intersections currently operate and are expected to continue to operate at an acceptable LOS with consideration of the Maybank Planned Development, with one exception.

The SC 700/Maybank Highway/Country Club Drive & SC 171/Folly Road intersection currently experiences LOS E conditions during the PM peak hour and is anticipated to experience LOS F conditions in the future, with or without the Maybank Planned Development. Project traffic is projected to be 1.8% of the total intersection traffic for the 2019 Build conditions. Due to the fact that the intersection is projected to operate at undesirable conditions and the minimal impact of the project traffic, no improvements are recommended at this time.

The results of the unsignalized intersection analyses for existing and future-year conditions for the weekday AM and PM peak-hour time periods are summarized in Table 5.3.

Table 5.3 – Unsignalized Intersection Analysis Results

Intersection	Approach	LOS/Delay (seconds)					
		2016 Peak Conditions		2019 No Build Conditions		2019 Build Conditions	
		AM	PM	AM	PM	AM	PM
SC 700/Maybank Highway & Fleming Road	EB	A/0.0	A/0.0	A/0.0	A/0.0	A/0.0	A/0.0
	WB	A/0.9	A/0.5	A/0.9	A/0.5	A/0.9	A/0.5
	NB	E/44.6	D/31.0	F/118.6	E/44.2	F/216.5	F/60.7
Fleming Road & Project Driveway	WB	-	-	A/9.0	A/8.9	A/9.1	A/9.0
	NB	-	-	A/0.0	A/0.0	A/0.0	A/0.0
	SB	-	-	A/0.6	A/1.0	A/0.6	A/1.0
SC 700/Maybank Highway & Project Driveway	EB	-	-	A/0.0	A/0.0	A/0.0	A/0.0
	WB	-	-	A/0.8	A/0.8	A/1.5	A/1.9
	NB	-	-	E/44.9	D/28.6	F/67.4	E/48.0

The results of the unsignalized intersection analyses for the SC 700/Maybank Highway & Fleming Road intersection indicate that the SC 700/Maybank Highway approaches to the intersection currently experience free-flow LOS A conditions and are expected to continue to experience free-flow LOS A conditions with the development of the project site. The northbound approach of the SC 700/Maybank Highway & Fleming Road intersection currently experiences LOS E conditions during the AM peak hour and is anticipated to experience LOS F conditions in the future, with or without consideration of the Maybank Planned Development. Future signalization of the SC 700/Maybank Highway & Fleming Road intersection would mitigate the undesirable conditions. Therefore, it is recommended that a signal warrant analysis be performed to determine if signal warrants would be met at the intersection of SC 700/Maybank Highway & Fleming Road upon completion of the project.

At the SC 700/Maybank Highway & Project Driveway intersection, the SC 700/Maybank Highway approaches to the intersection currently experience free-flow LOS A conditions and are expected to continue to experience free-flow LOS A conditions with the development of the Maybank Planned Development and the Standard. The northbound approach of the SC 700/Maybank Highway & Project Driveway intersection is projected to experience undesirable delay in the future with the development of the project site. It should be noted that the undesirable operating conditions for the SC 700/Maybank Highway & Project Driveway intersection will only impact residents and patrons of the Maybank Planned Development and the Standard. It is anticipated that future signalization of the SC 700/Maybank

Highway & Fleming Road intersection would attract additional trips from the Maybank Planned Development and the Standard, reducing the delay at the SC 700/Maybank Highway & Project Driveway intersection, as well as creating acceptable gaps for vehicles turning onto SC 700/Maybank Highway from the project site. Therefore, no improvements are recommended for the intersection at this time.

Worksheets documenting the intersection analyses are provided in Appendix D for 2016 Existing conditions, Appendix E for 2019 No Build conditions and Appendix F for 2019 Build conditions.

5.2 TURN LANE ANALYSIS

An analysis was conducted to determine the potential need for exclusive turn lanes for the proposed ingress movements at the existing project driveway intersection along Fleming Road. There is an existing right-turn lane along SC 700/Maybank Highway, which will accommodate the right-turn movement into the project. This analysis was conducted utilizing the criteria documented in SCDOT's *ARMS* manual and *Highway Design Manual* (2003).

The need for exclusive right-turn lanes is based upon the criteria documented in Section 15.5.1.1 of the *Highway Design Manual,* which consists of seven considerations. These considerations and applications for the existing project driveway along Fleming Road are listed below.

1) *at a free-flowing leg of any intersection on a two-lane urban or rural highway which satisfies the criteria in Figure 15.5A;*

   Fleming Road meets the criteria; therefore, the project driveway was analyzed for an exclusive right-turn lane using Figure 15.5A. The project driveway does not meet the criteria during either peak period. Worksheets documenting the turn lane analysis are provided in Appendix G.

2) *at the free-flowing leg of any unsignalized intersection on a high-speed, four-lane urban or rural highway which satisfies the criteria in Figure 15.5B;*

   The criteria are not applicable for Fleming Road.

3) *at any intersection where a capacity analysis determines a right-turn lane is necessary to meet the level-of-service criteria;*

   As shown in Table 5.2, the intersection is projected to operate at an acceptable LOS without an exclusive right-turn lane.

4) *at any signalized intersection where the projected right-turning volume is greater than 300 vehicles per hour and where there is greater than 300 vehicles per hour per lane on the mainline;*

   The intersection is not signalized and is not projected to experience greater than 300 right-turning vehicles per hour; therefore, this consideration is not applicable.

5) *for uniformity of intersection design along the highway if other intersections have right-turn lanes;*

   There are no right-turn lanes along Fleming Road at nearby intersections; therefore, this consideration is not met.

6) *at railroad crossings where the railroad is paralleled to the facility and is located close to the intersection and where a right-turn lane would be desirable to store queued vehicles avoiding interference with the movement of through traffic; or*

   The intersection is not near railroad facilities; therefore, this consideration is not applicable.

7) *at any intersection where the crash experience, existing traffic operations, sight distance restrictions, or engineering judgment indicates a significant conflict related to right turning vehicles.*

   No issues with crashes, traffic operations, or sight distance are known; therefore, this consideration is not applicable.

Based on the *Highway Design Manual* considerations for the project driveways, an exclusive northbound right-turn lane along Fleming Road at the project driveway is not recommended at this time.

The existing right-turn lane along SC 700/Maybank Highway will serve the eastbound right-turn movement at the project driveway.

The need for exclusive left-turn lanes is based upon the criteria documented in Section 15.5.1.2 of the *Highway Design Manual,* which consists of six considerations. These considerations and applications for the proposed project driveway along Fleming Road are listed below. There is an existing two-way, left-turn lane along SC 700/Maybank Highway, which will accommodate the left-turn movement into the project.

1) *at any unsignalized intersection on a two-lane urban or rural highway which satisfies the criteria in Figures 15.5C, 15.5D, 15.5E, 15.5F, 15.5G;*

   The criteria are not applicable for Fleming Road.

2) *at any signalized intersection. At locations where you have 300 vehicles per hour, consider a traffic review to determine if dual left-turn lanes are required;*

   The project driveway intersection is not signalized; therefore, this consideration is not applicable.

3) *at all entrances to major residential, commercial and industrial developments;*

   The development is not a major residential, commercial, or industrial development; therefore, this consideration is not applicable.

4) *at all median crossovers;*

   There is no median along Fleming Road; therefore, this consideration is not applicable.

5) *for uniformity of intersection design along the highway if other intersections have left-turn lanes (i.e., to satisfy driver expectancy);or*

   There are no other left-turn lanes along Fleming Road at nearby intersections; therefore, this consideration is not applicable.

6) *at any intersection where crash experience, traffic operations, sight distance restrictions (e.g., intersection beyond a crest vertical curve), or engineering judgment indicates a significant conflict related to left-turning vehicles.*

   No issues with crashes, traffic operations, or sight distance are known; therefore, this consideration is not applicable.

Based on the *Highway Design Manual* considerations for the project driveways, an exclusive left-turn lane along Fleming Road at the project driveway is not recommended at this time.

The existing two-way left-turn lane along SC 700/Maybank Highway will serve the westbound left-turn movement at the project driveway.

6.0 Summary of Findings and Recommendations

A traffic impact analysis was conducted for the Maybank Planned Development in accordance with City of Charleston and SCDOT guidelines. The proposed Maybank Planned Development is located on the south side of SC 700/Maybank Highway between Fleming Road and Wappoo Creek Drive in the City of Charleston, South Carolina and is proposed to consist of 270 apartments.

Access to the development will be provided through one existing full access driveway along SC 700/Maybank Highway and one existing full access driveway along Fleming Road. These driveways will be shared with the adjacent development, The Standard.

The results of the signalized intersection analyses indicate that the study intersections currently operate and are expected to continue to operate at an acceptable LOS with consideration of the Maybank Planned Development, with one exception. The SC 700/Maybank Highway/Country Club Drive & SC 171/Folly Road intersection currently experiences LOS E conditions during the PM peak hour and is anticipated to experience LOS F conditions in the future, with or without the project. Project traffic is projected to be 1.8% of the total intersection traffic for the 2019 Build conditions. Due to the fact that the intersection is projected to operate at undesirable conditions and the minimal impact of the project traffic, no improvements are recommended at this time.

The results of the unsignalized intersection analyses show the SC 700/Maybank Highway approaches to the intersections with Fleming Road and the Project Driveway currently experience free-flow LOS A conditions and are expected to continue to experience free-flow LOS A conditions with the development of the project site. The northbound approach of the SC 700/Maybank Highway & Fleming Road intersection currently experiences LOS E conditions during the AM peak hour and is anticipated to experience LOS F conditions in the future with or without consideration of the Maybank Planned Development. The northbound approach of the SC 700/Maybank Highway & Project Driveway intersection is projected to experience undesirable delay in the future with the development of the project site. Future signalization of the SC 700/Maybank Highway & Fleming Road intersection would mitigate the undesirable condition at both intersections. Therefore, it is recommended that a signal warrant analysis be performed to determine if signal warrants would be met at the intersection of SC 700/Maybank Highway & Fleming Road upon completion of the Maybank Planned Development and The Standard.

Based on the *Highway Design Manual* considerations for the project driveways, exclusive ingress turn lanes along Fleming Road at the project driveway are not recommended at this time. The existing right-turn lane along SC 700/Maybank Highway will serve the eastbound right-turn movement at the project driveway and the existing two-way left-turn lane along SC 700/Maybank Highway will serve the westbound left-turn movement at the project driveway.

Appendix A

Trip Generation Worksheet

TRIP GENERATION ESTIMATES

Maybank Planned Development

Weekday Daily

TRIP GENERATION CHARACTERISTICS						DIRECT. DISTRIB.		GROSS TRIPS			INTERNAL CAPTURE TRIPS				PASS-BY CAPTURE TRIPS				NEW EXTERNAL TRIPS		
Land Use	Ed.	LUC	Scale	Unit	Equation/Rate	In	Out	In	Out	Total	%	In	Out	Trips	%	In	Out	Trips	In	Out	Total
Apartment	9th	220	278	DU	T=6.06(X) + 123.56	50%	50%	904	904	1,808	12%	113	113	226	0%	0	0	0	791	791	1,582
Shopping Center	9th	820	7.5	ksf	Ln(T)=0.65 Ln(X) + 5.83	50%	50%	631	630	1,261	18%	113	113	226	34%	176	176	352	342	341	683
							Total:	1,535	1,534	3,069	15%	226	226	452	11%	176	176	352	1,133	1,132	2,265

Weekday AM Peak Hour

TRIP GENERATION CHARACTERISTICS						DIRECT. DISTRIB.		GROSS TRIPS			INTERNAL CAPTURE TRIPS				PASS-BY CAPTURE TRIPS				NEW EXTERNAL TRIPS		
Land Use	Ed.	LUC	Scale	Unit	Equation/Rate	In	Out	In	Out	Total	%	In	Out	Trips	%	In	Out	Trips	In	Out	Total
Apartment	9th	220	278	DU	T=0.49(X) + 3.73	20%	80%	28	112	140	1%	1	1	2	0%	0	0	0	27	111	138
Shopping Center	9th	820	7.5	ksf	Ln(T)=0.61 Ln(X)+2.24	62%	38%	20	12	32	6%	1	1	2	34%	5	5	10	14	6	20
							Total:	48	124	172	2%	2	2	4	6%	5	5	10	41	117	158

Weekday PM Peak Hour

TRIP GENERATION CHARACTERISTICS						DIRECT. DISTRIB.		GROSS TRIPS			INTERNAL CAPTURE TRIPS				PASS-BY CAPTURE TRIPS				NEW EXTERNAL TRIPS		
Land Use	Ed.	LUC	Scale	Unit	Equation/Rate	In	Out	In	Out	Total	%	In	Out	Trips	%	In	Out	Trips	In	Out	Total
Apartment	9th	220	278	DU	T=0.55(X) + 17.65	65%	35%	111	60	171	11%	14	5	19	0%	0	0	0	97	55	152
Shopping Center	9th	820	7.5	ksf	Ln(T)=0.67 Ln(X) + 3.31	48%	52%	51	55	106	18%	5	14	19	34%	15	15	30	31	26	57
							Total:	162	115	277	14%	19	19	38	11%	15	15	30	128	81	209

Appendix B

Traffic Count Data

Short Counts

735 Maryland St.
Columbia, SC 29201
You Can Count On Us!

Default Comments
Change These in The Preferences Window
Select File/Preference in the Main Scree
Then Click the Comments Tab

File Name : Folly Rd @ Maybank-Country Club
Site Code : 08252015
Start Date : 8/25/2015
Page No : 1

Groups Printed- Passenger Vehicles - Heavy Vehicles - Bank 2

	Folly Rd Southbound				Country Club Dr Westbound				Folly Rd Northbound				Maybank Hwy Eastbound				
Start Time	Left	Thru	Right	RTOR	Left	Thru	Right	RTOR	Left	Thru	Right	RTOR	Left	Thru	Right	RTOR	Int. Total
07:00	2	115	117	47	2	2	0	0	0	206	2	0	328	0	0	0	821
07:15	3	135	108	49	1	0	2	0	0	284	0	1	280	12	0	1	876
07:30	1	145	103	48	0	0	6	0	0	332	1	0	334	0	0	0	970
07:45	2	173	134	43	2	0	4	0	0	281	8	0	343	0	0	0	990
Total	8	568	462	187	5	2	12	0	0	1103	11	1	1285	12	0	1	3657
08:00	4	166	174	55	0	1	2	0	0	351	46	0	303	1	0	0	1103
08:15	5	137	185	82	2	0	1	0	0	296	3	1	352	0	0	0	1064
08:30	13	206	183	58	1	0	4	0	0	281	6	0	298	0	0	0	1050
08:45	11	168	126	45	3	0	3	0	0	270	3	0	271	1	0	0	901
Total	33	677	668	240	6	1	10	0	0	1198	58	1	1224	2	0	0	4118
16:00	6	271	180	132	9	3	5	0	0	185	2	0	240	0	0	0	1033
16:15	7	408	188	102	6	7	4	0	0	213	1	0	272	0	0	0	1208
16:30	4	355	209	119	7	1	8	0	0	185	0	0	243	0	0	0	1131
16:45	7	429	250	111	2	2	1	0	0	218	0	0	202	0	0	0	1222
Total	24	1463	827	464	24	13	18	0	0	801	3	0	957	0	0	0	4594
17:00	8	440	214	135	5	3	1	0	0	209	0	0	256	1	0	0	1272
17:15	10	454	219	134	7	0	6	0	0	211	0	0	272	0	0	0	1313
17:30	9	534	252	131	3	1	4	0	0	207	1	0	236	14	0	0	1392
17:45	6	535	193	163	5	4	2	0	0	192	2	0	263	0	0	0	1365
Total	33	1963	878	563	20	8	13	0	0	819	3	0	1027	15	0	0	5342
Grand Total	98	4671	2835	1454	55	24	53	0	0	3921	75	2	4493	29	0	1	17711
Apprch %	1.1	51.6	31.3	16.1	41.7	18.2	40.2	0	0	98.1	1.9	0.1	99.3	0.6	0	0	
Total %	0.6	26.4	16	8.2	0.3	0.1	0.3	0	0	22.1	0.4	0	25.4	0.2	0	0	
Passenger Vehicles	98	4657	2818	1446	55	24	52	0	0	3902	75	2	4473	29	0	1	17632
% Passenger Vehicles	100	99.7	99.4	99.4	100	100	98.1	0	0	99.5	100	100	99.6	100	0	100	99.6
Heavy Vehicles	0	14	17	8	0	0	1	0	0	19	0	0	20	0	0	0	79
% Heavy Vehicles	0	0.3	0.6	0.6	0	0	1.9	0	0	0.5	0	0	0.4	0	0	0	0.4
Bank 2	0	0	0	0	0	0	0	0	0	0	0	0	0	0	0	0	0
% Bank 2	0	0	0	0	0	0	0	0	0	0	0	0	0	0	0	0	0

Short Counts

735 Maryland St.
Columbia, SC 29201
You Can Count On Us!

File Name : Folly Rd @ Maybank-Country Club
Site Code : 08252015
Start Date : 8/25/2015
Page No : 2

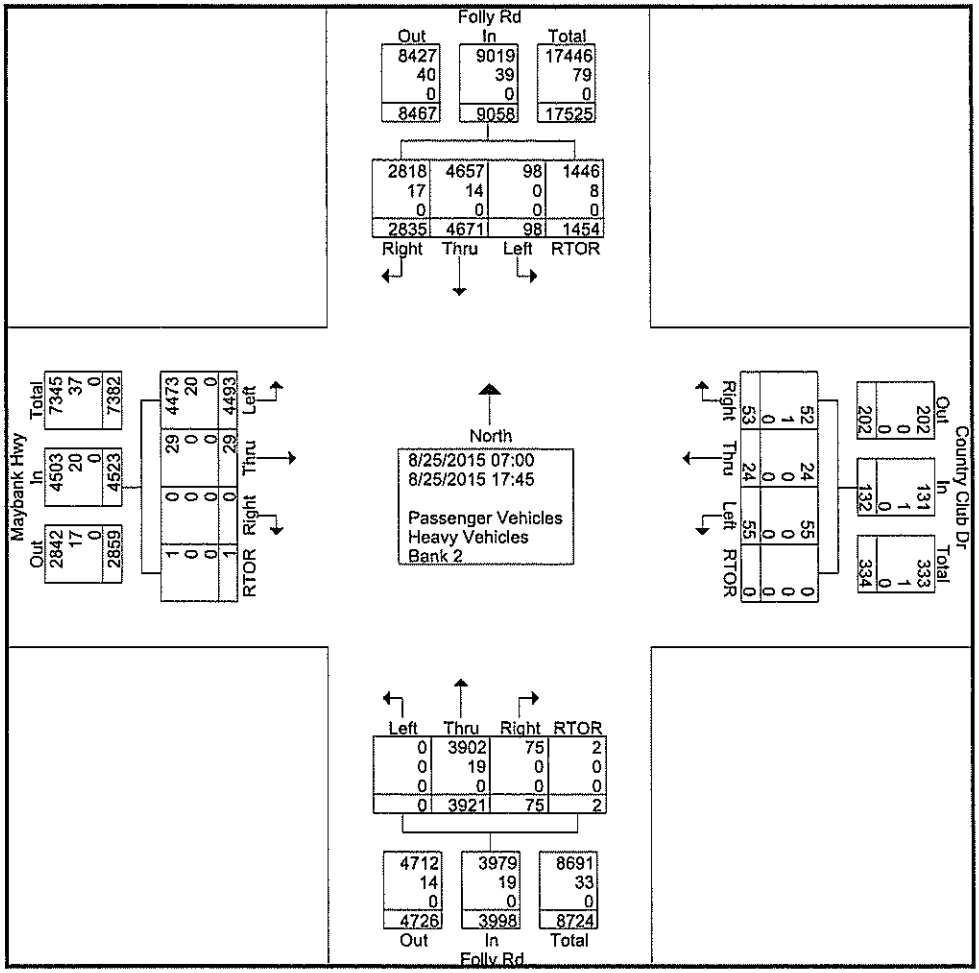

Short Counts

735 Maryland St.
Columbia, SC 29201
You Can Count On Us!

File Name : Folly Rd @ Maybank-Country Club
Site Code : 08252015
Start Date : 8/25/2015
Page No : 3

	Folly Rd Southbound					Country Club Dr Westbound					Folly Rd Northbound					Maybank Hwy Eastbound					
Start Time	Left	Thru	Right	RTOR	App. Total	Left	Thru	Right	RTOR	App. Total	Left	Thru	Right	RTOR	App. Total	Left	Thru	Right	RTOR	App. Total	Int. Total
Peak Hour Analysis From 07:00 to 08:45 - Peak 1 of 1																					
Peak Hour for Entire Intersection Begins at 07:45																					
07:45	2	173	134	43	352	**2**	0	**4**	0	**6**	0	281	8	0	289	343	0	0	0	343	990
08:00	4	166	174	55	399	0	**1**	2	0	3	0	**351**	**46**	0	**397**	303	1	0	0	304	**1103**
08:15	5	137	**185**	**82**	409	2	0	1	0	3	0	296	3	1	300	**352**	0	0	0	**352**	1064
08:30	**13**	**206**	183	58	**460**	1	0	4	0	5	0	281	6	0	287	298	0	0	0	298	1050
Total Volume	24	682	676	238	1620	5	1	11	0	17	0	1209	63	1	1273	1296	1	0	0	1297	4207
% App. Total	1.5	42.1	41.7	14.7		29.4	5.9	64.7	0		0	95	4.9	0.1		99.9	0.1	0	0		
PHF	.462	.828	.914	.726	.880	.625	.250	.688	.000	.708	.000	.861	.342	.250	.802	.920	.250	.000	.000	.921	.954

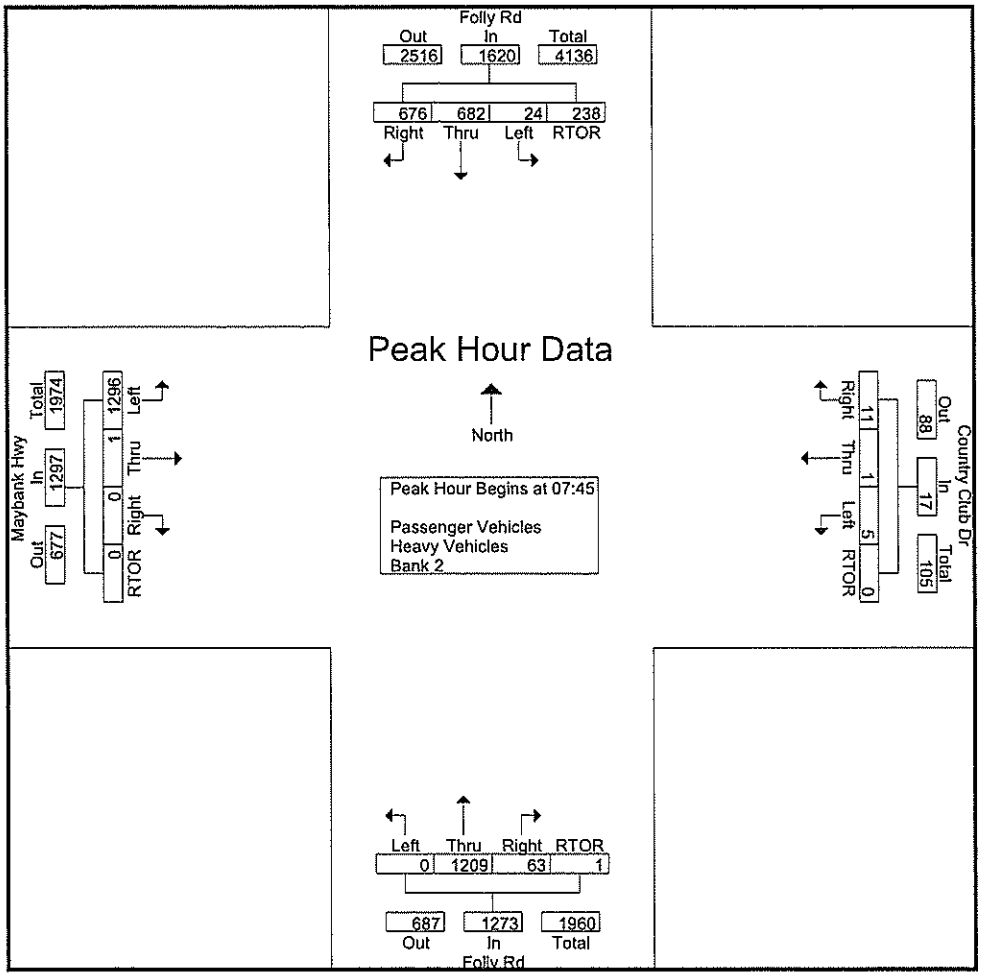

Short Counts

735 Maryland St.
Columbia, SC 29201
You Can Count On Us!

File Name : Folly Rd @ Maybank-Country Club
Site Code : 08252015
Start Date : 8/25/2015
Page No : 4

	Folly Rd Southbound					Country Club Dr Westbound					Folly Rd Northbound					Maybank Hwy Eastbound					
Start Time	Left	Thru	Right	RTOR	App. Total	Left	Thru	Right	RTOR	App. Total	Left	Thru	Right	RTOR	App. Total	Left	Thru	Right	RTOR	App. Total	Int. Total
Peak Hour Analysis From 16:00 to 17:45 - Peak 1 of 1																					
Peak Hour for Entire Intersection Begins at 17:00																					
17:00	8	440	214	135	797	5	3	1	0	9	0	209	0	0	209	256	1	0	0	257	1272
17:15	10	454	219	134	817	7	0	6	0	13	0	211	0	0	211	272	0	0	0	272	1313
17:30	9	534	252	131	926	3	1	4	0	8	0	207	1	0	208	236	14	0	0	250	1392
17:45	6	535	193	163	897	5	4	2	0	11	0	192	2	0	194	263	0	0	0	263	1365
Total Volume	33	1963	878	563	3437	20	8	13	0	41	0	819	3	0	822	1027	15	0	0	1042	5342
% App. Total	1	57.1	25.5	16.4		48.8	19.5	31.7	0		0	99.6	0.4	0		98.6	1.4	0	0		
PHF	.825	.917	.871	.863	.928	.714	.500	.542	.000	.788	.000	.970	.375	.000	.974	.944	.268	.000	.000	.958	.959

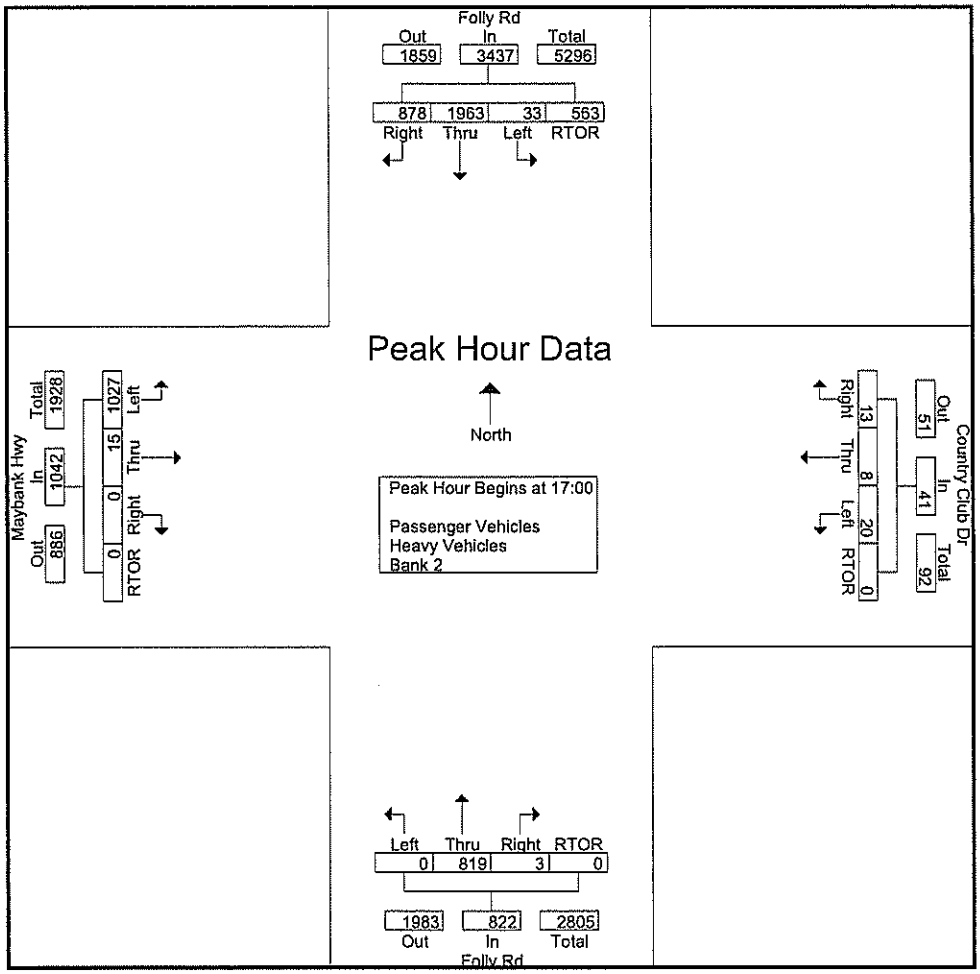

Short Counts

735 Maryland St.
Columbia, SC 29201
You Can Count On Us!

Default Comments
Change These in The Preferences Window
Select File/Preference in the Main Scree
Then Click the Comments Tab

File Name : Folly Rd @ Old Folly Rd
Site Code : 08262015
Start Date : 8/26/2015
Page No : 1

Groups Printed- Passenger Vehicles - Heavy Vehicles - Bank 2

	Folly Rd Southbound				Westbound				Folly Rd Northbound				Old Folly Rd Eastbound				
Start Time	Left	Thru	Right	RTOR	Left	Thru	Right	RTOR	Left	Thru	Right	RTOR	Left	Thru	Right	RTOR	Int. Total
07:00	0	127	3	0	0	0	0	0	46	226	0	0	0	0	5	80	487
07:15	0	136	3	0	0	0	0	0	52	231	0	0	0	0	11	102	535
07:30	0	146	3	0	0	0	0	0	67	360	0	0	0	0	11	52	639
07:45	0	181	3	0	0	0	0	0	64	305	0	0	0	0	7	42	602
Total	0	590	12	0	0	0	0	0	229	1122	0	0	0	0	34	276	2263
08:00	0	150	8	0	0	0	0	0	61	353	0	2	0	0	7	65	646
08:15	0	158	0	0	0	0	0	0	72	262	0	1	0	0	16	77	586
08:30	0	182	7	0	0	0	0	0	98	252	0	0	0	0	2	65	606
08:45	0	133	11	0	0	0	0	0	66	188	0	0	0	0	25	79	502
Total	0	623	26	0	0	0	0	0	297	1055	0	3	0	0	50	286	2340
16:00	0	271	4	0	0	0	0	0	127	176	0	0	0	0	34	56	668
16:15	0	325	5	0	0	0	0	0	130	195	0	0	0	0	23	58	736
16:30	0	300	9	0	0	0	0	0	118	204	0	1	0	0	35	86	753
16:45	0	322	1	0	0	0	0	0	127	197	0	0	0	0	29	49	725
Total	0	1218	19	0	0	0	0	0	502	772	0	1	0	0	121	249	2882
17:00	0	330	8	0	0	0	0	0	139	231	0	1	0	0	24	65	798
17:15	0	324	9	0	0	0	0	0	127	204	0	0	0	0	29	86	779
17:30	0	404	3	0	0	0	0	0	120	179	0	0	0	0	31	59	796
17:45	0	280	8	0	0	0	0	0	110	150	0	0	0	0	31	26	605
Total	0	1338	28	0	0	0	0	0	496	764	0	1	0	0	115	236	2978
Grand Total	0	3769	85	0	0	0	0	0	1524	3713	0	5	0	0	320	1047	10463
Apprch %	0	97.8	2.2	0	0	0	0	0	29.1	70.8	0	0.1	0	0	23.4	76.6	
Total %	0	36	0.8	0	0	0	0	0	14.6	35.5	0	0	0	0	3.1	10	
Passenger Vehicles	0	3757	84	0	0	0	0	0	1512	3696	0	5	0	0	320	1044	10418
% Passenger Vehicles	0	99.7	98.8	0	0	0	0	0	99.2	99.5	0	100	0	0	100	99.7	99.6
Heavy Vehicles	0	12	1	0	0	0	0	0	12	17	0	0	0	0	0	3	45
% Heavy Vehicles	0	0.3	1.2	0	0	0	0	0	0.8	0.5	0	0	0	0	0	0.3	0.4
Bank 2	0	0	0	0	0	0	0	0	0	0	0	0	0	0	0	0	0
% Bank 2	0	0	0	0	0	0	0	0	0	0	0	0	0	0	0	0	0

Short Counts

735 Maryland St.
Columbia, SC 29201
You Can Count On Us!

File Name : Folly Rd @ Old Folly Rd
Site Code : 08262015
Start Date : 8/26/2015
Page No : 2

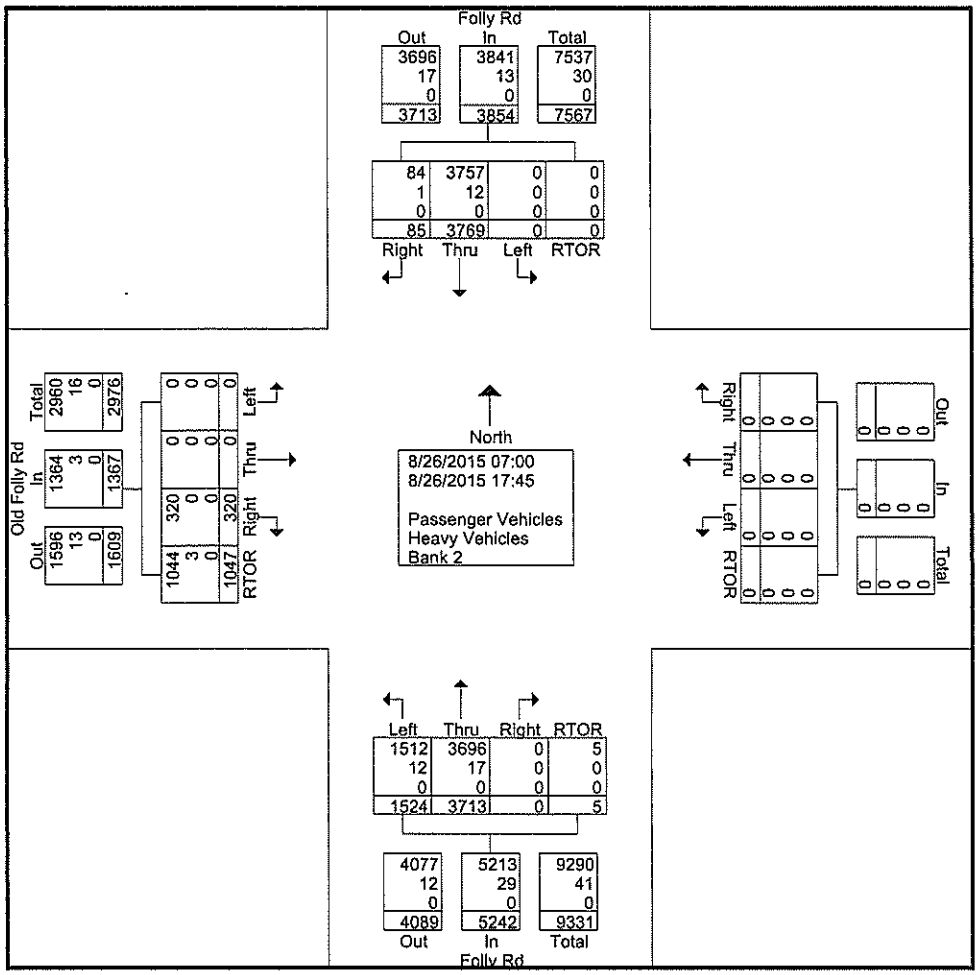

Short Counts

735 Maryland St.
Columbia, SC 29201
You Can Count On Us!

File Name : Folly Rd @ Old Folly Rd
Site Code : 08262015
Start Date : 8/26/2015
Page No : 3

	Folly Rd Southbound					Westbound					Folly Rd Northbound					Old Folly Rd Eastbound					
Start Time	Left	Thru	Right	RTOR	App. Total	Left	Thru	Right	RTOR	App. Total	Left	Thru	Right	RTOR	App. Total	Left	Thru	Right	RTOR	App. Total	Int. Total
Peak Hour Analysis From 07:00 to 08:45 - Peak 1 of 1																					
Peak Hour for Entire Intersection Begins at 07:30																					
07:30	0	146	3	0	149	0	0	0	0	0	67	**360**	0	0	**427**	0	0	11	52	63	639
07:45	0	**181**	3	0	**184**	0	0	0	0	0	64	305	0	0	369	0	0	7	42	49	602
08:00	0	150	**8**	0	158	0	0	0	0	0	61	353	0	**2**	416	0	0	7	65	72	**646**
08:15	0	158	0	0	158	0	0	0	0	0	**72**	262	0	1	335	0	0	**16**	**77**	**93**	586
Total Volume	0	635	14	0	649	0	0	0	0	0	264	1280	0	3	1547	0	0	41	236	277	2473
% App. Total	0	97.8	2.2	0		0	0	0	0		17.1	82.7	0	0.2		0	0	14.8	85.2		
PHF	.000	.877	.438	.000	.882	.000	.000	.000	.000	.000	.917	.889	.000	.375	.906	.000	.000	.641	.766	.745	.957

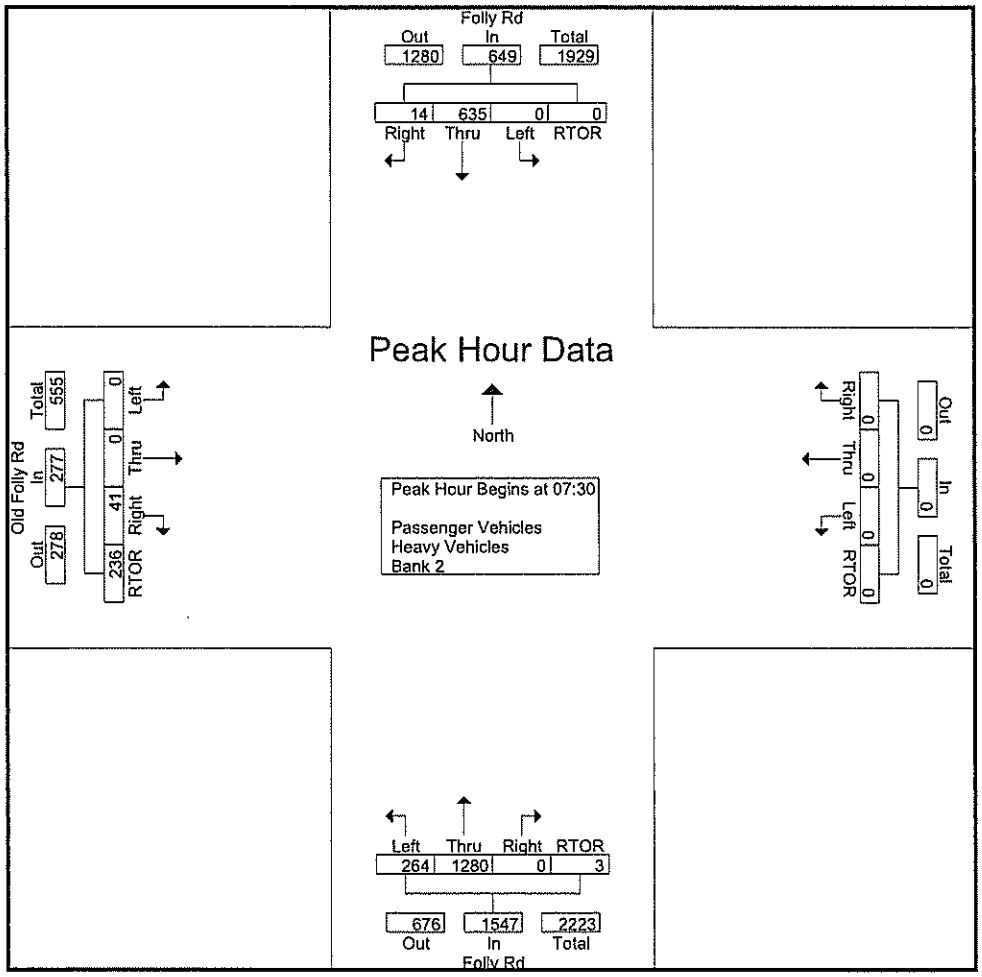

Short Counts

735 Maryland St.
Columbia, SC 29201
You Can Count On Us!

File Name : Folly Rd @ Old Folly Rd
Site Code : 08262015
Start Date : 8/26/2015
Page No : 4

	Folly Rd Southbound					Westbound					Folly Rd Northbound					Old Folly Rd Eastbound					
Start Time	Left	Thru	Right	RTOR	App Total	Left	Thru	Right	RTOR	App. Total	Left	Thru	Right	RTOR	App. Total	Left	Thru	Right	RTOR	App. Total	Int. Total
Peak Hour Analysis From 16:00 to 17:45 - Peak 1 of 1																					
Peak Hour for Entire Intersection Begins at 16:45																					
16:45	0	322	1	0	323	0	0	0	0	0	127	197	0	0	324	0	0	29	49	78	725
17:00	0	330	8	0	338	0	0	0	0	0	**139**	**231**	0	**1**	**371**	0	0	24	65	89	**798**
17:15	0	324	**9**	0	333	0	0	0	0	0	127	204	0	0	331	0	0	29	**86**	**115**	779
17:30	0	**404**	3	0	**407**	0	0	0	0	0	120	179	0	0	299	0	0	**31**	59	90	796
Total Volume	0	1380	21	0	1401	0	0	0	0	0	513	811	0	1	1325	0	0	113	259	372	3098
% App. Total	0	98.5	1.5	0		0	0	0	0		38.7	61.2	0	0.1		0	0	30.4	69.6		
PHF	.000	.854	.583	.000	.861	.000	.000	.000	.000	.000	.923	.878	.000	.250	.893	.000	.000	.911	.753	.809	.971

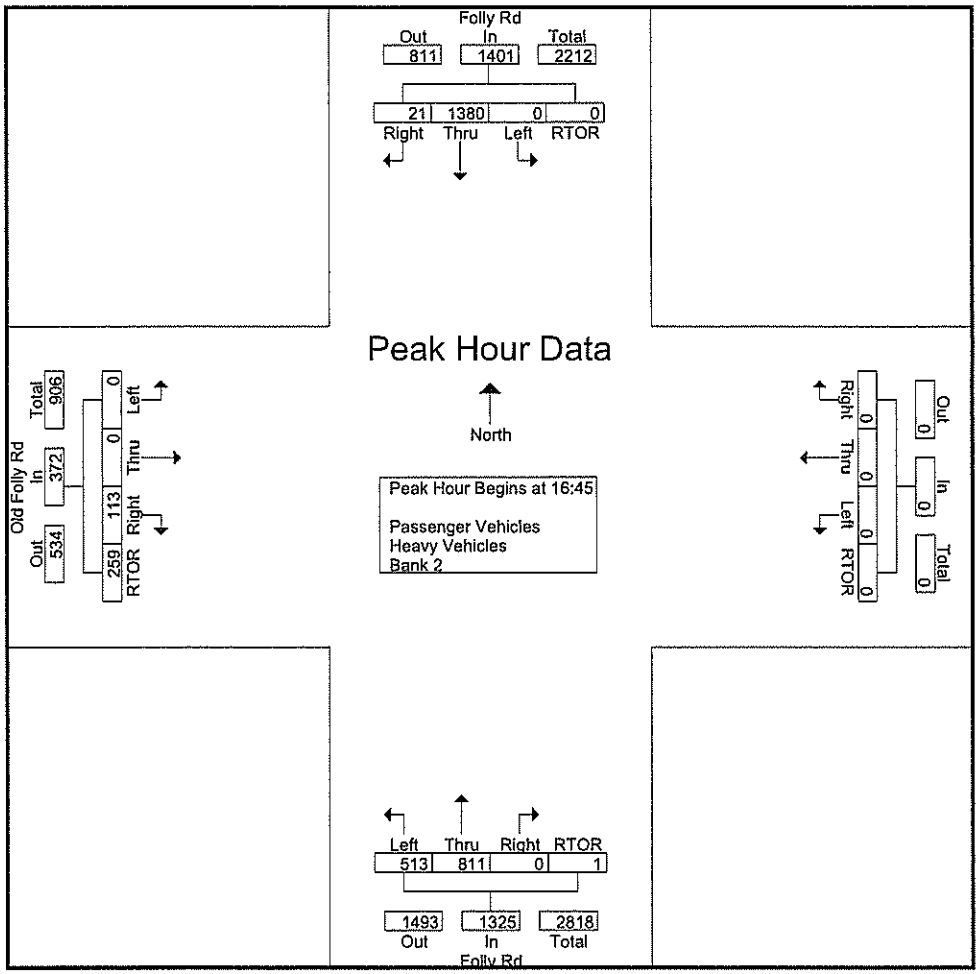

Short Counts

735 Maryland St.
Columbia, SC 29201
You Can Count On Us!

Default Comments
Change These in The Preferences Window
Select File/Preference in the Main Scree
Then Click the Comments Tab

File Name : Maybank @ Old Folly Rd
Site Code : 08252015
Start Date : 8/25/2015
Page No : 1

Groups Printed- Passenger Vehicles - Heavy Vehicles - Bank 2

	Business Southbound				Maybank Hwy Westbound				Old Folly Rd Northbound				Maybank Hwy Eastbound				
Start Time	Left	Thru	Right	RTOR	Left	Thru	Right	RTOR	Left	Thru	Right	RTOR	Left	Thru	Right	RTOR	Int. Total
07:00	0	0	0	1	0	128	0	0	28	0	0	0	1	303	62	2	525
07:15	0	0	0	0	0	138	0	0	28	0	2	0	0	263	75	6	512
07:30	0	0	0	0	0	118	0	0	54	0	2	0	0	353	56	3	586
07:45	0	0	0	0	0	163	0	0	56	0	0	0	0	306	35	5	565
Total	0	0	0	1	0	547	0	0	166	0	4	0	1	1225	228	16	2188
08:00	0	0	0	0	0	141	0	0	59	0	0	0	0	295	57	6	558
08:15	0	0	0	1	0	171	0	0	56	0	1	0	0	272	63	10	574
08:30	0	0	0	0	0	167	0	0	68	0	1	0	0	278	65	9	588
08:45	0	0	0	1	0	133	0	0	63	0	0	0	0	196	59	7	459
Total	0	0	0	2	0	612	0	0	246	0	2	0	0	1041	244	32	2179
16:00	0	0	0	0	0	282	0	0	121	0	1	0	1	220	67	12	704
16:15	0	0	0	0	0	284	0	0	112	0	1	0	0	244	85	4	730
16:30	0	0	0	0	0	307	0	0	129	0	0	0	0	205	60	3	704
16:45	0	0	0	0	0	300	0	0	81	0	0	2	0	212	69	4	668
Total	0	0	0	0	0	1173	0	0	443	0	2	2	1	881	281	23	2806
17:00	0	0	0	0	0	313	0	0	112	0	1	0	0	236	67	4	733
17:15	0	0	0	0	0	321	0	0	109	0	0	0	0	219	68	6	723
17:30	0	0	0	0	0	335	0	0	88	0	1	5	0	226	61	1	717
17:45	0	0	0	0	0	337	0	0	103	0	1	0	0	178	70	6	695
Total	0	0	0	0	0	1306	0	0	412	0	3	5	0	859	266	17	2868
Grand Total	0	0	0	3	0	3638	0	0	1267	0	11	7	2	4006	1019	88	10041
Apprch %	0	0	0	100	0	100	0	0	98.6	0	0.9	0.5	0	78.3	19.9	1.7	
Total %	0	0	0	0	0	36.2	0	0	12.6	0	0.1	0.1	0	39.9	10.1	0.9	
Passenger Vehicles	0	0	0	0	0	3585	0	0	1251	0	8	6	2	3954	1003	86	9895
% Passenger Vehicles	0	0	0	0	0	98.5	0	0	98.7	0	72.7	85.7	100	98.7	98.4	97.7	98.5
Heavy Vehicles	0	0	0	0	0	46	0	0	13	0	1	1	0	48	13	1	123
% Heavy Vehicles	0	0	0	0	0	1.3	0	0	1	0	9.1	14.3	0	1.2	1.3	1.1	1.2
Bank 2	0	0	0	3	0	7	0	0	3	0	2	0	0	4	3	1	23
% Bank 2	0	0	0	100	0	0.2	0	0	0.2	0	18.2	0	0	0.1	0.3	1.1	0.2

Short Counts

735 Maryland St.
Columbia, SC 29201
You Can Count On Us!

File Name : Maybank @ Old Folly Rd
Site Code : 08252015
Start Date : 8/25/2015
Page No : 2

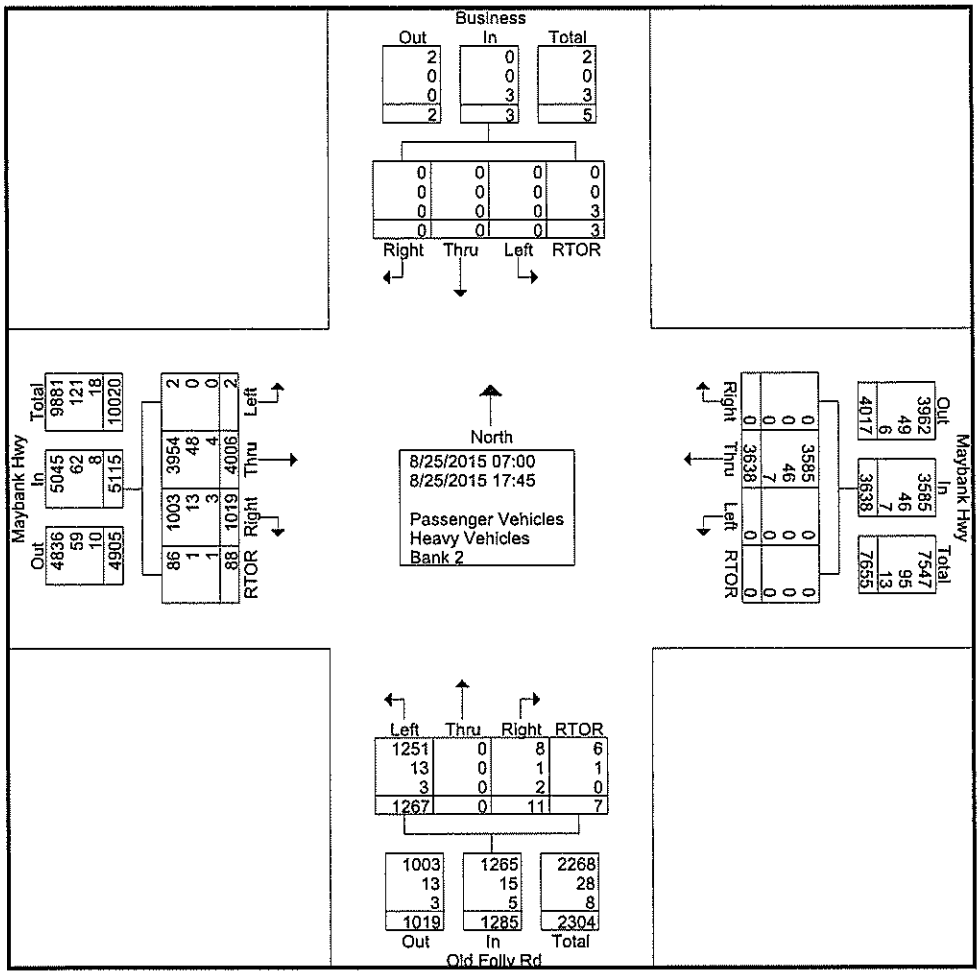

Short Counts

735 Maryland St.
Columbia, SC 29201
You Can Count On Us!

File Name : Maybank @ Old Folly Rd
Site Code : 08252015
Start Date : 8/25/2015
Page No : 3

	Business Southbound					Maybank Hwy Westbound					Old Folly Rd Northbound					Maybank Hwy Eastbound					
Start Time	Left	Thru	Right	RTOR	App. Total	Left	Thru	Right	RTOR	App. Total	Left	Thru	Right	RTOR	App. Total	Left	Thru	Right	RTOR	App. Total	Int. Total
Peak Hour Analysis From 07:00 to 08:45 - Peak 1 of 1																					
Peak Hour for Entire Intersection Begins at 07:45																					
07:45	0	0	0	0	0	0	163	0	0	163	56	0	0	0	56	0	**306**	35	5	346	565
08:00	0	0	0	0	0	0	141	0	0	141	59	0	0	0	59	0	295	57	6	**358**	558
08:15	0	0	0	**1**	**1**	0	**171**	0	0	**171**	56	0	**1**	0	57	0	272	63	**10**	345	574
08:30	0	0	0	0	0	0	167	0	0	167	**68**	0	1	0	**69**	0	278	**65**	9	352	**588**
Total Volume	0	0	0	1	1	0	642	0	0	642	239	0	2	0	241	0	1151	220	30	1401	2285
% App. Total	0	0	0	100		0	100	0	0		99.2	0	0.8	0		0	82.2	15.7	2.1		
PHF	.000	.000	.000	.250	.250	.000	.939	.000	.000	.939	.879	.000	.500	.000	.873	.000	.940	.846	.750	.978	.972

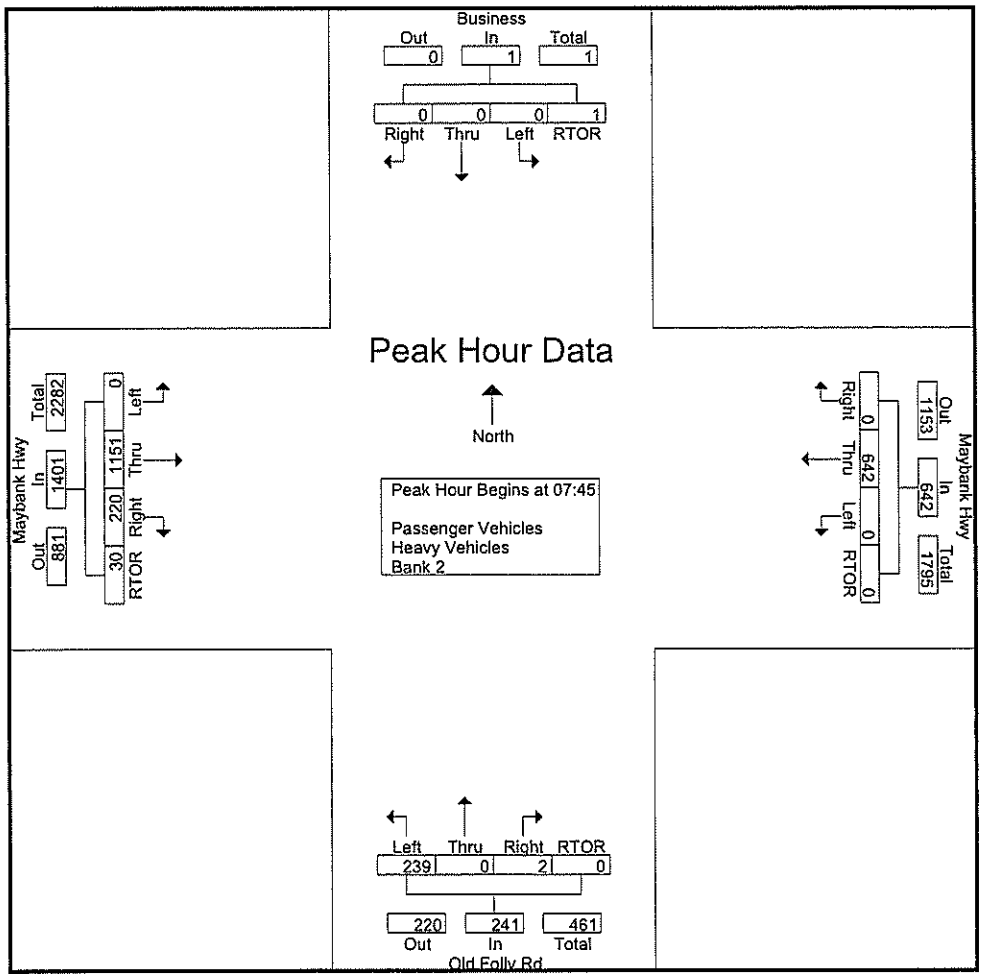

Short Counts

735 Maryland St.
Columbia, SC 29201
You Can Count On Us!

File Name : Maybank @ Old Folly Rd
Site Code : 08252015
Start Date : 8/25/2015
Page No : 4

	Business Southbound					Maybank Hwy Westbound					Old Folly Rd Northbound					Maybank Hwy Eastbound					
Start Time	Left	Thru	Right	RTOR	App. Total	Left	Thru	Right	RTOR	App. Total	Left	Thru	Right	RTOR	App. Total	Left	Thru	Right	RTOR	App. Total	Int. Total
Peak Hour Analysis From 16:00 to 17:45 - Peak 1 of 1																					
Peak Hour for Entire Intersection Begins at 17:00																					
17:00	0	0	0	0	0	0	313	0	0	313	**112**	0	1	0	**113**	0	**236**	67	4	**307**	**733**
17:15	0	0	0	0	0	0	321	0	0	321	109	0	0	0	109	0	219	68	6	293	723
17:30	0	0	0	0	0	0	335	0	0	335	88	0	1	5	94	0	226	61	1	288	717
17:45	0	0	0	0	0	0	**337**	0	0	**337**	103	0	1	0	104	0	178	**70**	6	254	695
Total Volume	0	0	0	0	0	0	1306	0	0	1306	412	0	3	5	420	0	859	266	17	1142	2868
% App. Total	0	0	0	0		0	100	0	0		98.1	0	0.7	1.2		0	75.2	23.3	1.5		
PHF	.000	.000	.000	.000	.000	.000	.969	.000	.000	.969	.920	.000	.750	.250	.929	.000	.910	.950	.708	.930	.978

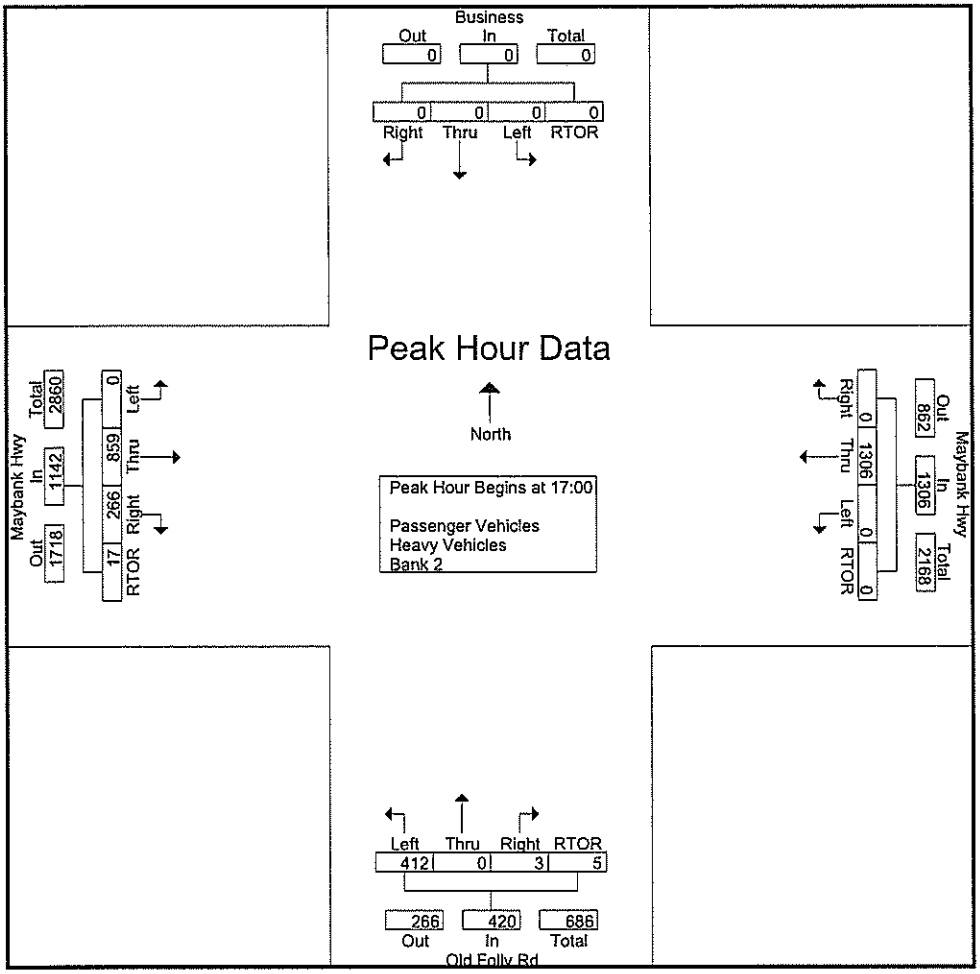

Short Counts

735 Maryland St.
Columbia, SC 29201

You Can Count On Us!

Default Comments
Change These in The Preferences Window
Select File/Preference in the Main Scree
Then Click the Comments Tab

File Name : Maybank Hwy @ Wappoo Creek Pl
Site Code : 08262015
Start Date : 8/26/2015
Page No : 1

Groups Printed- Passenger Vehicles - Heavy Vehicles - Bank 2

	Wappoo Creek Pl Southbound				Maybank Hwy Westbound				Shopping Center Northbound				Maybank Hwy Eastbound				
Start Time	Left	Thru	Right	RTOR	Left	Thru	Right	RTOR	Left	Thru	Right	RTOR	Left	Thru	Right	RTOR	Int. Total
07:00	2	0	0	0	5	185	2	0	5	0	2	0	2	433	4	0	640
07:15	5	0	2	0	4	255	11	0	3	0	3	0	9	424	2	0	718
07:30	5	0	5	0	4	195	12	0	1	1	0	0	12	433	1	0	669
07:45	4	0	1	0	1	181	16	0	8	3	1	0	5	384	5	0	609
Total	16	0	8	0	14	816	41	0	17	4	6	0	28	1674	12	0	2636
08:00	4	0	2	0	5	216	14	0	5	1	4	0	15	411	4	0	681
08:15	7	0	1	0	6	259	27	0	6	5	1	0	5	426	2	0	745
08:30	9	1	1	0	10	229	30	0	6	1	4	0	14	380	3	0	688
08:45	6	0	0	0	5	182	50	0	10	2	2	0	9	355	2	0	623
Total	26	1	4	0	26	886	121	0	27	9	11	0	43	1572	11	0	2737
16:00	16	1	0	0	3	195	43	0	4	0	0	0	2	165	1	0	430
16:15	24	0	6	0	2	400	11	0	5	0	2	0	11	185	4	0	650
16:30	50	0	1	0	11	356	7	0	5	2	1	0	14	239	6	0	692
16:45	70	0	3	0	7	347	11	0	12	1	1	0	4	202	8	0	666
Total	160	1	10	0	23	1298	72	0	26	3	4	0	31	791	19	0	2438
17:00	52	0	9	0	8	383	12	0	13	0	2	0	11	273	9	0	772
17:15	38	0	6	0	3	386	7	0	8	2	0	0	9	227	9	0	695
17:30	41	0	2	0	7	399	12	0	19	0	1	0	6	227	6	0	720
17:45	22	0	1	0	5	346	8	0	13	1	1	0	4	205	7	0	613
Total	153	0	18	0	23	1514	39	0	53	3	4	0	30	932	31	0	2800
Grand Total	355	2	40	0	86	4514	273	0	123	19	25	0	132	4969	73	0	10611
Apprch %	89.4	0.5	10.1	0	1.8	92.6	5.6	0	73.7	11.4	15	0	2.6	96	1.4	0	
Total %	3.3	0	0.4	0	0.8	42.5	2.6	0	1.2	0.2	0.2	0	1.2	46.8	0.7	0	
Passenger Vehicles	352	2	39	0	86	4438	273	0	122	19	25	0	131	4912	71	0	10470
% Passenger Vehicles	99.2	100	97.5	0	100	98.3	100	0	99.2	100	100	0	99.2	98.9	97.3	0	98.7
Heavy Vehicles	3	0	1	0	0	76	0	0	1	0	0	0	1	57	2	0	141
% Heavy Vehicles	0.8	0	2.5	0	0	1.7	0	0	0.8	0	0	0	0.8	1.1	2.7	0	1.3
Bank 2	0	0	0	0	0	0	0	0	0	0	0	0	0	0	0	0	0
% Bank 2	0	0	0	0	0	0	0	0	0	0	0	0	0	0	0	0	0

Short Counts

735 Maryland St.
Columbia, SC 29201
You Can Count On Us!

File Name : Maybank Hwy @ Wappoo Creek Pl
Site Code : 08262015
Start Date : 8/26/2015
Page No : 2

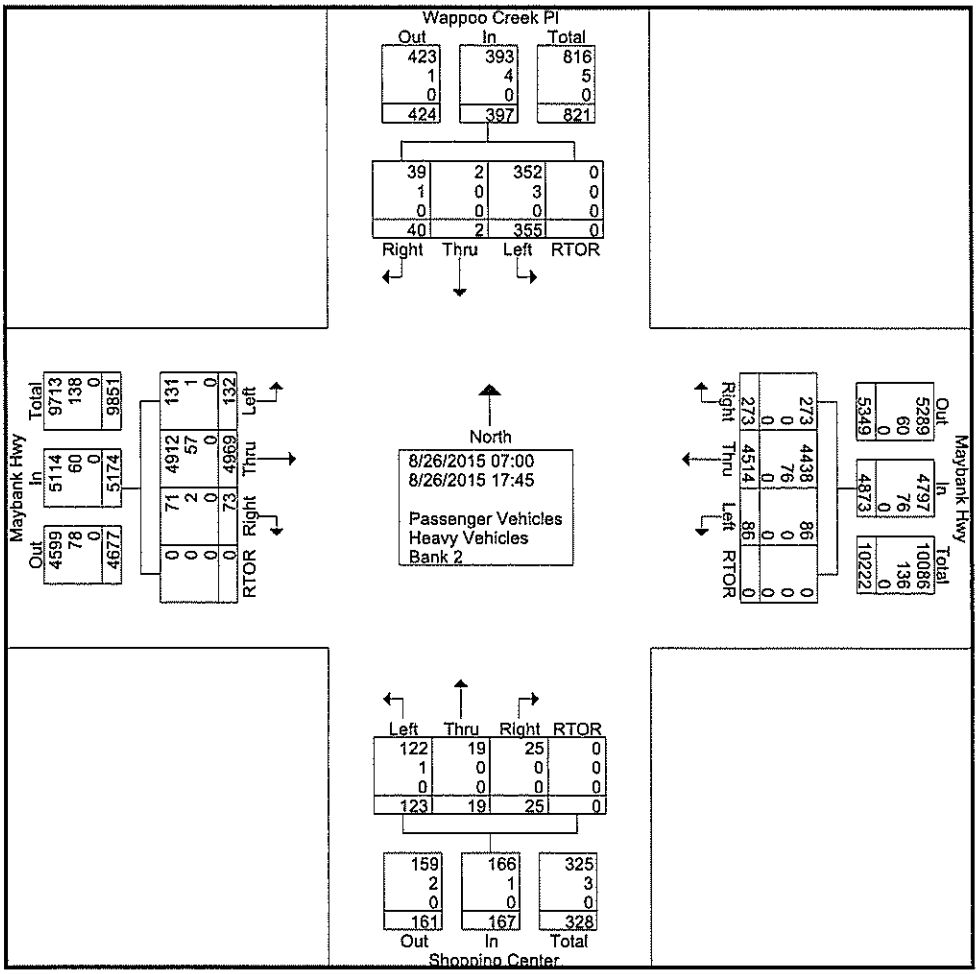

Short Counts

735 Maryland St.
Columbia, SC 29201
You Can Count On Us!

File Name : Maybank Hwy @ Wappoo Creek Pl
Site Code : 08262015
Start Date : 8/26/2015
Page No : 3

	Wappoo Creek Pl Southbound					Maybank Hwy Westbound					Shopping Center Northbound					Maybank Hwy Eastbound					
Start Time	Left	Thru	Right	RTOR	App. Total	Left	Thru	Right	RTOR	App. Total	Left	Thru	Right	RTOR	App. Total	Left	Thru	Right	RTOR	App. Total	Int. Total
Peak Hour Analysis From 07:00 to 08:45 - Peak 1 of 1																					
Peak Hour for Entire Intersection Begins at 08:00																					
08:00	4	0	**2**	0	6	5	216	14	0	235	5	1	**4**	0	10	**15**	411	**4**	0	430	681
08:15	7	0	1	0	8	6	**259**	27	0	**292**	6	**5**	1	0	12	5	**426**	2	0	**433**	**745**
08:30	**9**	**1**	1	0	**11**	**10**	229	30	0	269	6	1	4	0	11	14	380	3	0	397	688
08:45	6	0	0	0	6	5	182	**50**	0	237	**10**	2	2	0	**14**	9	355	2	0	366	623
Total Volume	26	1	4	0	31	26	886	121	0	1033	27	9	11	0	47	43	1572	11	0	1626	2737
% App. Total	83.9	3.2	12.9	0		2.5	85.8	11.7	0		57.4	19.1	23.4	0		2.6	96.7	0.7	0		
PHF	.722	.250	.500	.000	.705	.650	.855	.605	.000	.884	.675	.450	.688	.000	.839	.717	.923	.688	.000	.939	.918

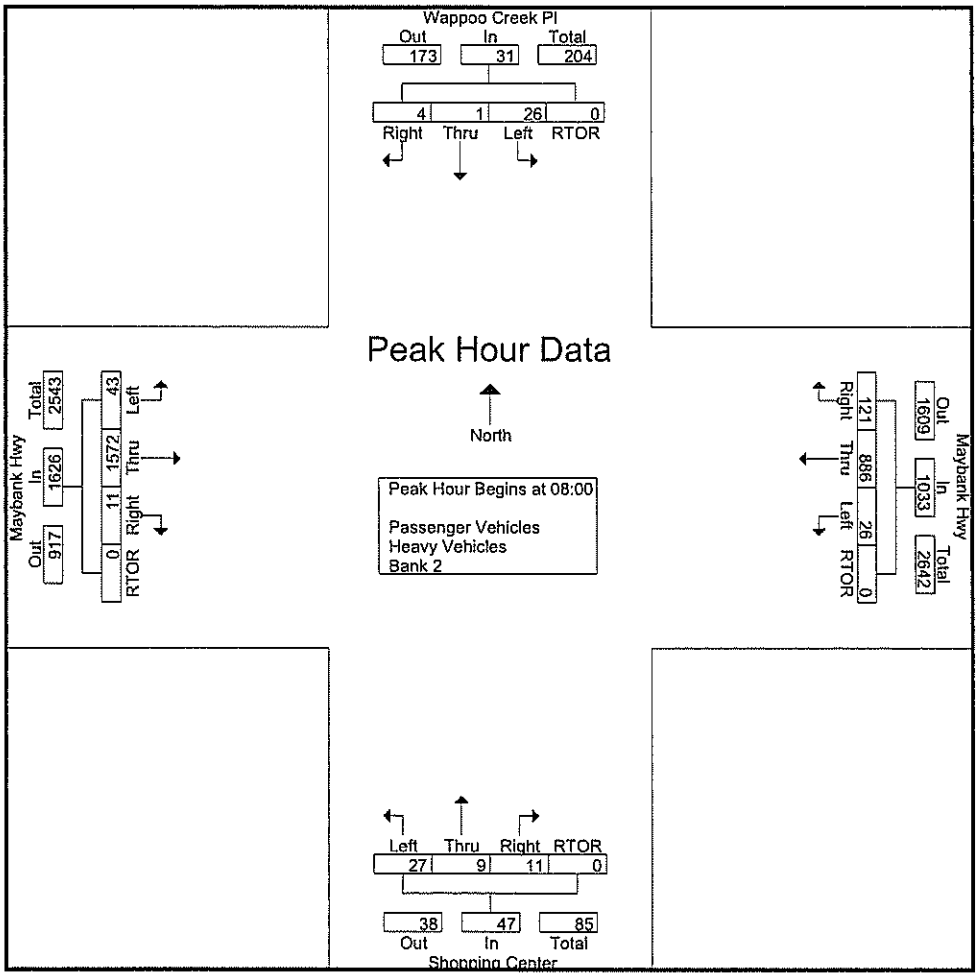

Short Counts

735 Maryland St.
Columbia, SC 29201
You Can Count On Us!

File Name : Maybank Hwy @ Wappoo Creek Pl
Site Code : 08262015
Start Date : 8/26/2015
Page No : 4

	Wappoo Creek Pl Southbound					Maybank Hwy Westbound					Shopping Center Northbound					Maybank Hwy Eastbound					
Start Time	Left	Thru	Right	RTOR	App. Total	Left	Thru	Right	RTOR	App. Total	Left	Thru	Right	RTOR	App. Total	Left	Thru	Right	RTOR	App. Total	Int. Total
Peak Hour Analysis From 16:00 to 17:45 - Peak 1 of 1																					
Peak Hour for Entire Intersection Begins at 16:45																					
16:45	**70**	0	3	0	**73**	7	347	11	0	365	12	1	1	0	14	4	202	8	0	214	666
17:00	52	0	**9**	0	61	**8**	383	**12**	0	403	13	0	**2**	0	15	**11**	**273**	**9**	0	**293**	**772**
17:15	38	0	6	0	44	3	386	7	0	396	8	**2**	0	0	10	9	227	9	0	245	695
17:30	41	0	2	0	43	7	**399**	12	0	**418**	**19**	0	1	0	**20**	6	227	6	0	239	720
Total Volume	201	0	20	0	221	25	1515	42	0	1582	52	3	4	0	59	30	929	32	0	991	2853
% App. Total	91	0	9	0		1.6	95.8	2.7	0		88.1	5.1	6.8	0		3	93.7	3.2	0		
PHF	.718	.000	.556	.000	.757	.781	.949	.875	.000	.946	.684	.375	.500	.000	.738	.682	.851	.889	.000	.846	.924

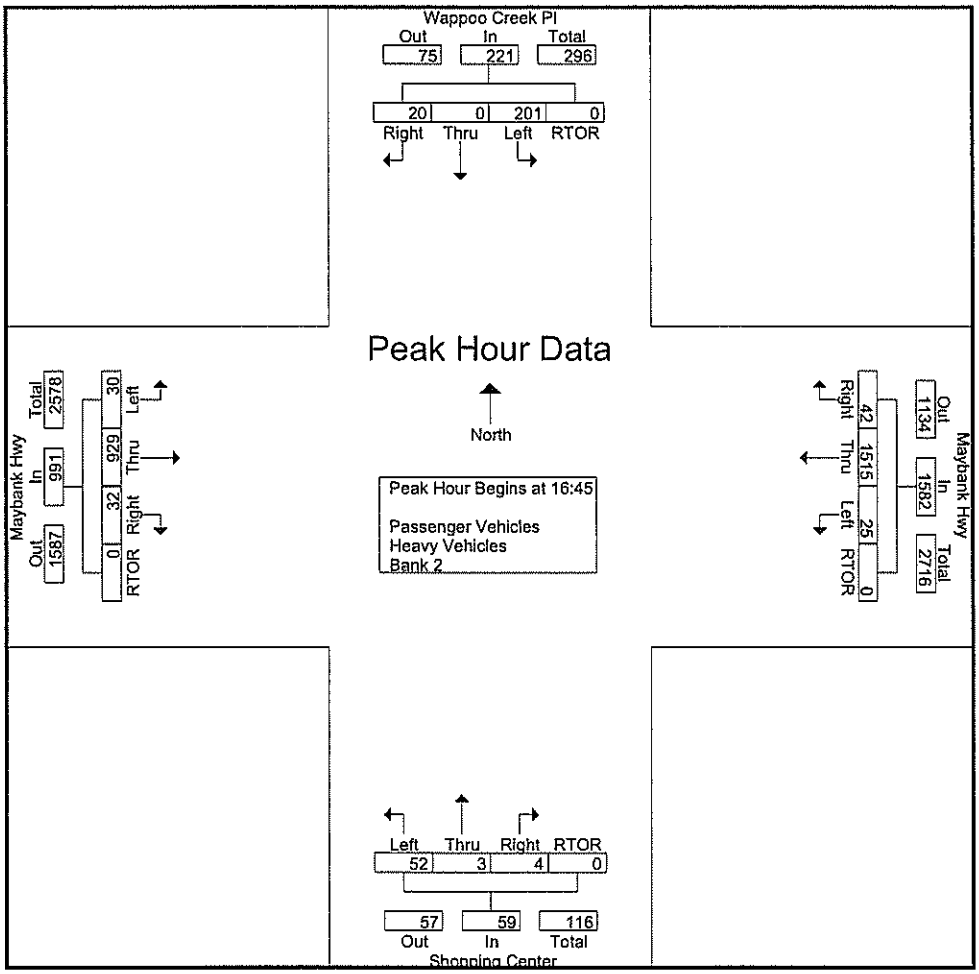

Short Counts

735 Maryland St.
Columbia, SC 29201
You Can Count On Us!

Default Comments
Change These in The Preferences Window
Select File/Preference in the Main Scree
Then Click the Comments Tab

File Name : Maybank @ Fleming
Site Code : 01162013
Start Date : 1/16/2013
Page No : 1

Groups Printed- Unshifted

	Southbound				Maybank Westbound				Fleming Northbound				Maybank Eastbound				
Start Time	Left	Thru	Right	Peds	Left	Thru	Right	Peds	Left	Thru	Right	Peds	Left	Thru	Right	Peds	Int. Total
07:00	0	0	0	0	9	110	0	1	6	0	6	0	0	290	5	0	427
07:15	0	0	0	0	13	108	0	0	4	0	12	0	0	365	10	0	512
07:30	0	0	0	0	11	159	0	0	4	0	18	0	0	418	3	0	613
07:45	0	0	0	0	7	136	0	0	3	0	20	0	0	437	10	0	613
Total	0	0	0	0	40	513	0	1	17	0	56	0	0	1510	28	0	2165
08:00	0	0	0	0	9	189	0	0	7	0	26	0	0	388	11	0	630
08:15	0	0	0	1	5	160	0	0	3	0	16	0	0	378	1	1	565
08:30	0	0	0	0	10	143	0	0	5	0	15	0	0	399	3	0	575
08:45	0	0	0	0	6	164	0	0	3	0	15	0	0	303	6	0	497
Total	0	0	0	1	30	656	0	0	18	0	72	0	0	1468	21	1	2267
16:00	0	0	0	0	18	275	0	0	7	0	19	0	0	201	3	0	523
16:15	0	0	0	0	18	307	0	0	9	0	14	0	0	177	15	0	540
16:30	0	0	0	0	15	284	0	0	9	0	19	0	0	203	6	0	536
16:45	0	0	0	0	10	338	0	0	7	0	15	0	0	207	8	0	585
Total	0	0	0	0	61	1204	0	0	32	0	67	0	0	788	32	0	2184
17:00	0	0	0	0	17	330	0	0	10	0	12	0	0	208	12	0	589
17:15	0	0	0	0	15	335	0	0	15	0	15	0	0	207	10	0	597
17:30	0	0	0	0	15	372	0	0	9	0	13	0	0	263	5	0	677
17:45	0	0	0	0	20	398	0	0	11	0	13	0	0	209	9	0	660
Total	0	0	0	0	67	1435	0	0	45	0	53	0	0	887	36	0	2523
Grand Total	0	0	0	1	198	3808	0	1	112	0	248	0	0	4653	117	1	9139
Apprch %	0	0	0	100	4.9	95	0	0	31.1	0	68.9	0	0	97.5	2.5	0	
Total %	0	0	0	0	2.2	41.7	0	0	1.2	0	2.7	0	0	50.9	1.3	0	

Short Counts

735 Maryland St.
Columbia, SC 29201
You Can Count On Us!

File Name : Maybank @ Fleming
Site Code : 01162013
Start Date : 1/16/2013
Page No : 3

	Southbound					Maybank Westbound					Fleming Northbound					Maybank Eastbound					
Start Time	Left	Thru	Right	Peds	App. Total	Left	Thru	Right	Peds	App. Total	Left	Thru	Right	Peds	App. Total	Left	Thru	Right	Peds	App. Total	Int. Total
Peak Hour Analysis From 07:00 to 08:45 - Peak 1 of 1																					
Peak Hour for Entire Intersection Begins at 07:30																					
07:30	0	0	0	0	0	11	159	0	0	170	4	0	18	0	22	0	418	3	0	421	613
07:45	0	0	0	0	0	7	136	0	0	143	3	0	20	0	23	0	437	10	0	447	613
08:00	0	0	0	0	0	9	189	0	0	198	7	0	26	0	33	0	388	11	0	399	630
08:15	0	0	0	1	1	5	160	0	0	165	3	0	16	0	19	0	378	1	1	380	565
Total Volume	0	0	0	1	1	32	644	0	0	676	17	0	80	0	97	0	1621	25	1	1647	2421
% App. Total	0	0	0	100		4.7	95.3	0	0		17.5	0	82.5	0		0	98.4	1.5	0.1		
PHF	.000	.000	.000	.250	.250	.727	.852	.000	.000	.854	.607	.000	.769	.000	.735	.000	.927	.568	.250	.921	.961

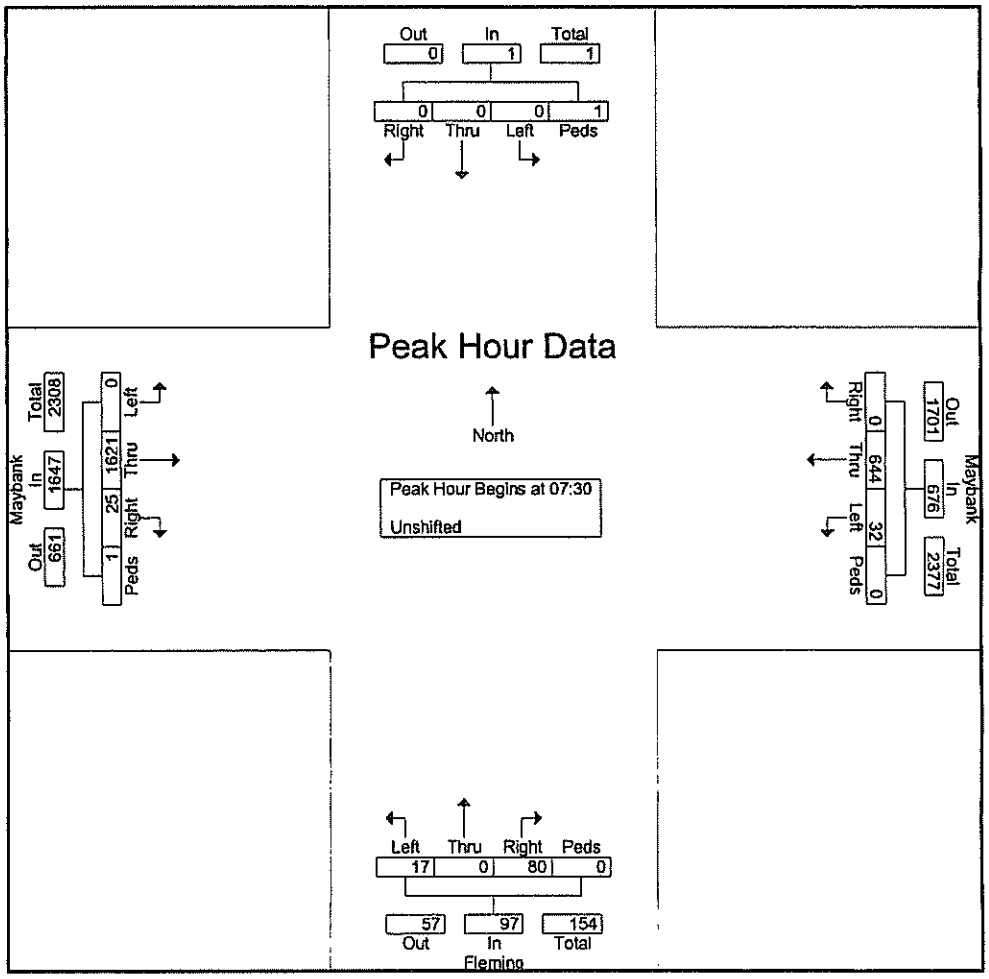

Short Counts

735 Maryland St.
Columbia, SC 29201
You Can Count On Us!

File Name : Maybank @ Fleming
Site Code : 01162013
Start Date : 1/16/2013
Page No : 4

	Southbound					Maybank Westbound					Fleming Northbound					Maybank Eastbound					
Start Time	Left	Thru	Right	Peds	App. Total	Left	Thru	Right	Peds	App. Total	Left	Thru	Right	Peds	App. Total	Left	Thru	Right	Peds	App. Total	Int. Total
Peak Hour Analysis From 16:00 to 17:45 - Peak 1 of 1																					
Peak Hour for Entire Intersection Begins at 17:00																					
17:00	0	0	0	0	0	17	330	0	0	347	10	0	12	0	22	0	208	12	0	220	589
17:15	0	0	0	0	0	15	335	0	0	350	15	0	15	0	30	0	207	10	0	217	597
17:30	0	0	0	0	0	15	372	0	0	387	9	0	13	0	22	0	263	5	0	268	677
17:45	0	0	0	0	0	20	398	0	0	418	11	0	13	0	24	0	209	9	0	218	660
Total Volume	0	0	0	0	0	67	1435	0	0	1502	45	0	53	0	98	0	887	36	0	923	2523
% App. Total	0	0	0	0		4.5	95.5	0	0		45.9	0	54.1	0		0	96.1	3.9	0		
PHF	.000	.000	.000	.000	.000	.838	.901	.000	.000	.898	.750	.000	.883	.000	.817	.000	.843	.750	.000	.861	.932

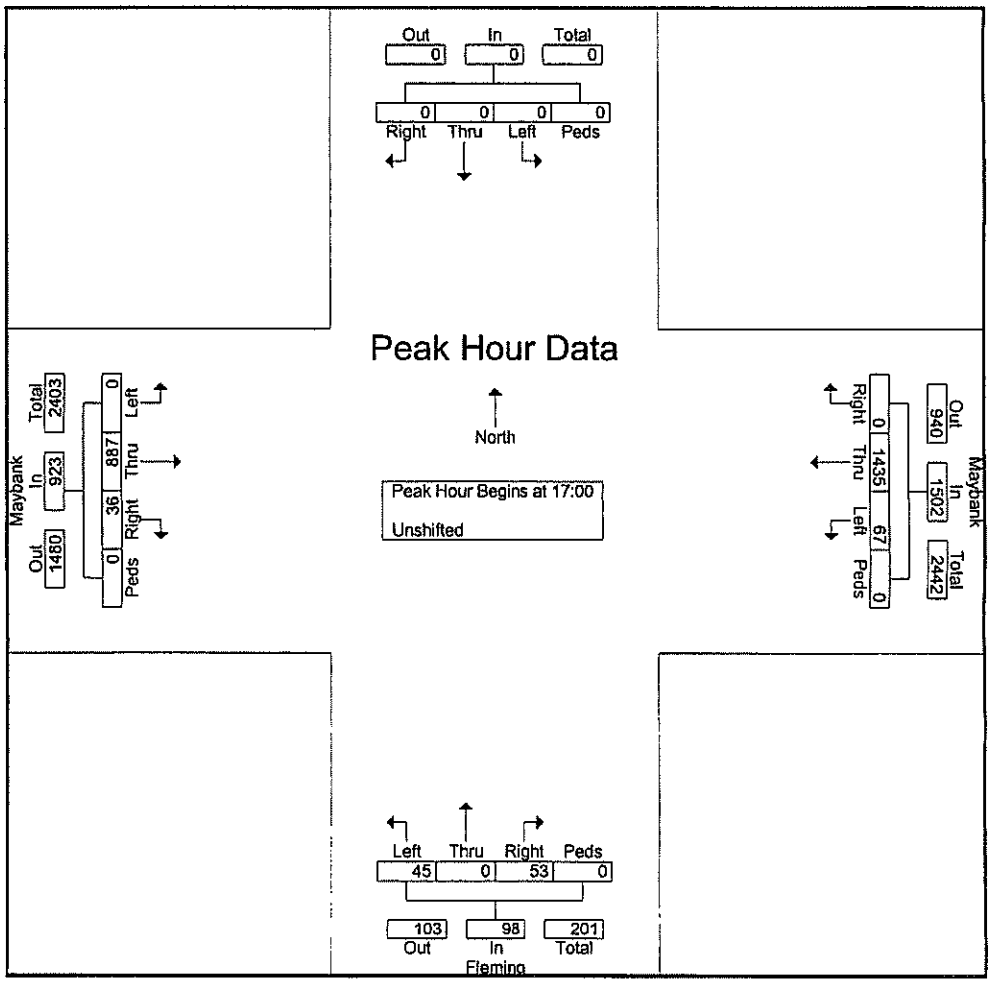

Appendix C

Traffic Volume Development Worksheets

INTERSECTION TRAFFIC VOLUME DEVELOPMENT

Maybank Highway & Fleming Road

TRAFFIC CONTROL: Unsignalized

DATE COUNTED:

AM PEAK HOUR (7:30-8:30 AM)	EBL	EBT	EBR	WBL	WBT	WBR	NBL	NBT	NBR	SBL	SBT	SBR
2015 TRAFFIC VOLUMES		1654	26	33	657		17		82			
Years To Current (2016)	1	1	1	1	1	1	1	1	1	1	1	1
Yearly Growth Rate	1.0%	1.0%	1.0%	1.0%	1.0%	1.0%	1.0%	1.0%	1.0%	1.0%	1.0%	1.0%
Background Traffic Growth	0	17	0	0	7	0	0	0	1	0	0	0
2016 TRAFFIC VOLUMES	**0**	**1671**	**26**	**33**	**664**	**0**	**17**	**0**	**83**	**0**	**0**	**0**
Years To Buildout (2019)	3	3	3	3	3	3	3	3	3	3	3	3
Yearly Growth Rate	1.0%	1.0%	1.0%	1.0%	1.0%	1.0%	1.0%	1.0%	1.0%	1.0%	1.0%	1.0%
Background Traffic Growth	0	51	1	1	20	0	1	0	3	0	0	0
Vested Traffic		25	5		35		17		20			
2019 NO-BUILD TRAFFIC VOLUMES	**0**	**1,746**	**32**	**34**	**719**	**0**	**35**	**0**	**105**	**0**	**0**	**0**
New Project Traffic		10			10		19					
Pass-By Project Traffic												
2019 BUILD TRAFFIC VOLUMES	**0**	**1,756**	**32**	**34**	**729**	**0**	**54**	**0**	**105**	**0**	**0**	**0**

PM PEAK HOUR (4:15-5:15 PM)	EBL	EBT	EBR	WBL	WBT	WBR	NBL	NBT	NBR	SBL	SBT	SBR
2015 TRAFFIC VOLUMES		905	37	68	1464		46		54			
Years To Current (2016)	1	1	1	1	1	1	1	1	1	1	1	1
Yearly Growth Rate	1.0%	1.0%	1.0%	1.0%	1.0%	1.0%	1.0%	1.0%	1.0%	1.0%	1.0%	1.0%
Background Traffic Growth	0	9	0	1	15	0	0	0	1	0	0	0
2016 TRAFFIC VOLUMES	**0**	**914**	**37**	**69**	**1479**	**0**	**46**	**0**	**55**	**0**	**0**	**0**
Years To Buildout (2019)	3	3	3	3	3	3	3	3	3	3	3	3
Yearly Growth Rate	1.0%	1.0%	1.0%	1.0%	1.0%	1.0%	1.0%	1.0%	1.0%	1.0%	1.0%	1.0%
Background Traffic Growth	0	28	1	2	45	0	1	0	2	0	0	0
Vested Traffic		47	17		35		9		11			
2019 NO-BUILD TRAFFIC VOLUMES	**0**	**989**	**56**	**71**	**1,558**	**0**	**57**	**0**	**67**	**0**	**0**	**0**
New Project Traffic		32			7		13					
Pass-By Project Traffic												
2019 BUILD TRAFFIC VOLUMES	**0**	**1,021**	**56**	**71**	**1,565**	**0**	**70**	**0**	**67**	**0**	**0**	**0**

INTERSECTION TRAFFIC VOLUME DEVELOPMENT

Maybank Highway & Project Driveway

TRAFFIC CONTROL: Unsignalized

DATE COUNTED:

AM PEAK HOUR (7:30-8:30 AM)	EBL	EBT	EBR	WBL	WBT	WBR	NBL	NBT	NBR	SBL	SBT	SBR
2015 TRAFFIC VOLUMES		1626			917							
Years To Current (2016)	1	1	1	1	1	1	1	1	1	1	1	1
Yearly Growth Rate	1.0%	1.0%	1.0%	1.0%	1.0%	1.0%	1.0%	1.0%	1.0%	1.0%	1.0%	1.0%
Background Traffic Growth	0	16	0	0	9	0	0	0	0	0	0	0
2016 TRAFFIC VOLUMES	**0**	**1642**	**0**	**0**	**926**	**0**	**0**	**0**	**0**	**0**	**0**	**0**
Years To Buildout (2019)	3	3	3	3	3	3	3	3	3	3	3	3
Yearly Growth Rate	1.0%	1.0%	1.0%	1.0%	1.0%	1.0%	1.0%	1.0%	1.0%	1.0%	1.0%	1.0%
Background Traffic Growth	0	50	0	0	28	0	0	0	0	0	0	0
Vested Traffic		20	25	40			35		79			
2019 NO-BUILD TRAFFIC VOLUMES	**0**	**1,712**	**25**	**40**	**954**	**0**	**35**	**0**	**79**	**0**	**0**	**0**
New Project Traffic			10	31			10		88			
Pass-By Project Traffic		-3	3	2	-2		2		3			
2019 BUILD TRAFFIC VOLUMES	**0**	**1,709**	**38**	**73**	**952**	**0**	**47**	**0**	**170**	**0**	**0**	**0**

PM PEAK HOUR (4:15-5:15 PM)	EBL	EBT	EBR	WBL	WBT	WBR	NBL	NBT	NBR	SBL	SBT	SBR
2015 TRAFFIC VOLUMES		**991**			**1587**							
Years To Current (2016)	1	1	1	1	1	1	1	1	1	1	1	1
Yearly Growth Rate	1.0%	1.0%	1.0%	1.0%	1.0%	1.0%	1.0%	1.0%	1.0%	1.0%	1.0%	1.0%
Background Traffic Growth	0	10	0	0	16	0	0	0	0	0	0	0
2016 TRAFFIC VOLUMES	**0**	**1001**	**0**	**0**	**1603**	**0**	**0**	**0**	**0**	**0**	**0**	**0**
Years To Buildout (2019)	3	3	3	3	3	3	3	3	3	3	3	3
Yearly Growth Rate	1.0%	1.0%	1.0%	1.0%	1.0%	1.0%	1.0%	1.0%	1.0%	1.0%	1.0%	1.0%
Background Traffic Growth	0	30	0	0	49	0	0	0	0	0	0	0
Vested Traffic		11	47	109			35		59			
2019 NO-BUILD TRAFFIC VOLUMES	**0**	**1,042**	**47**	**109**	**1,651**	**0**	**35**	**0**	**59**	**0**	**0**	**0**
New Project Traffic			32	96			7		61			
Pass-By Project Traffic		-8	8	7	-7		7		8			
2019 BUILD TRAFFIC VOLUMES	**0**	**1,034**	**87**	**212**	**1,644**	**0**	**49**	**0**	**128**	**0**	**0**	**0**

INTERSECTION TRAFFIC VOLUME DEVELOPMENT

Maybank Highway & Wappoo Creek Drive

TRAFFIC CONTROL: Signalized

DATE COUNTED: Wednesday August 26, 2015

AM PEAK HOUR (8:00-9:00 AM)	EBL	EBT	EBR	WBL	WBT	WBR	NBL	NBT	NBR	SBL	SBT	SBR
2015 TRAFFIC VOLUMES	43	1572	11	26	886	121	27	9	11	26	1	4
Years To Current (2016)	1	1	1	1	1	1	1	1	1	1	1	1
Yearly Growth Rate	1.0%	1.0%	1.0%	1.0%	1.0%	1.0%	1.0%	1.0%	1.0%	1.0%	1.0%	1.0%
Background Traffic Growth	0	16	0	0	9	1	0	0	0	0	0	0
2016 TRAFFIC VOLUMES	**43**	**1588**	**11**	**26**	**895**	**122**	**27**	**9**	**11**	**26**	**1**	**4**
Years To Buildout (2019)	3	3	3	3	3	3	3	3	3	3	3	3
Yearly Growth Rate	1.0%	1.0%	1.0%	1.0%	1.0%	1.0%	1.0%	1.0%	1.0%	1.0%	1.0%	1.0%
Background Traffic Growth	1	48	0	1	27	4	1	0	0	1	0	0
Vested Traffic		99			40							
2019 NO-BUILD TRAFFIC VOLUMES	**45**	**1,735**	**11**	**27**	**962**	**126**	**28**	**9**	**11**	**27**	**1**	**4**
New Project Traffic		88			31							
Pass-By Project Traffic												
2019 BUILD TRAFFIC VOLUMES	**45**	**1,823**	**11**	**27**	**993**	**126**	**28**	**9**	**11**	**27**	**1**	**4**

PM PEAK HOUR (4:15-5:15 PM)	EBL	EBT	EBR	WBL	WBT	WBR	NBL	NBT	NBR	SBL	SBT	SBR
2015 TRAFFIC VOLUMES	30	929	32	25	1515	42	52	3	4	201	0	20
Years To Current (2016)	1	1	1	1	1	1	1	1	1	1	1	1
Yearly Growth Rate	1.0%	1.0%	1.0%	1.0%	1.0%	1.0%	1.0%	1.0%	1.0%	1.0%	1.0%	1.0%
Background Traffic Growth	0	9	0	0	15	0	1	0	0	2	0	0
2016 TRAFFIC VOLUMES	**30**	**938**	**32**	**25**	**1530**	**42**	**53**	**3**	**4**	**203**	**0**	**20**
Years To Buildout (2019)	3	3	3	3	3	3	3	3	3	3	3	3
Yearly Growth Rate	1.0%	1.0%	1.0%	1.0%	1.0%	1.0%	1.0%	1.0%	1.0%	1.0%	1.0%	1.0%
Background Traffic Growth	1	28	1	1	46	1	2	0	0	6	0	1
Vested Traffic		70			109							
2019 NO-BUILD TRAFFIC VOLUMES	**31**	**1,037**	**33**	**26**	**1,686**	**44**	**54**	**3**	**4**	**209**	**0**	**21**
New Project Traffic		61			96							
Pass-By Project Traffic												
2019 BUILD TRAFFIC VOLUMES	**31**	**1,098**	**33**	**26**	**1,782**	**44**	**54**	**3**	**4**	**209**	**0**	**21**

INTERSECTION TRAFFIC VOLUME DEVELOPMENT

Maybank Highway & Old Folly Road

TRAFFIC CONTROL: Signalized

DATE COUNTED: Tuesday August 25, 2015

AM PEAK HOUR (7:45-8:45 AM)	EBL	EBT	EBR	WBL	WBT	WBR	NBL	NBT	NBR	SBL	SBT	SBR
2015 TRAFFIC VOLUMES	0	1151	250	0	642	0	239	0	2	0	0	0
Years To Current (2016)	1	1	1	1	1	1	1	1	1	1	1	1
Yearly Growth Rate	1.0%	1.0%	1.0%	1.0%	1.0%	1.0%	1.0%	1.0%	1.0%	1.0%	1.0%	1.0%
Background Traffic Growth	0	12	3	0	6	0	2	0	0	0	0	0
2016 TRAFFIC VOLUMES	**0**	**1163**	**253**	**0**	**648**	**0**	**241**	**0**	**2**	**0**	**0**	**0**
Years To Buildout (2019)	3	3	3	3	3	3	3	3	3	3	3	3
Yearly Growth Rate	1.0%	1.0%	1.0%	1.0%	1.0%	1.0%	1.0%	1.0%	1.0%	1.0%	1.0%	1.0%
Background Traffic Growth	0	35	8	0	20	0	7	0	0	0	0	0
Vested Traffic		66	33		27		13					
2019 NO-BUILD TRAFFIC VOLUMES	**0**	**1,264**	**293**	**0**	**695**	**0**	**262**	**0**	**2**	**0**	**0**	**0**
New Project Traffic		59	29		21		10					
Pass-By Project Traffic												
2019 BUILD TRAFFIC VOLUMES	**0**	**1,323**	**322**	**0**	**716**	**0**	**272**	**0**	**2**	**0**	**0**	**0**

PM PEAK HOUR (5:00-6:00 PM)	EBL	EBT	EBR	WBL	WBT	WBR	NBL	NBT	NBR	SBL	SBT	SBR
2015 TRAFFIC VOLUMES	0	859	283	0	1306	0	412	0	8	0	0	0
Years To Current (2016)	1	1	1	1	1	1	1	1	1	1	1	1
Yearly Growth Rate	1.0%	1.0%	1.0%	1.0%	1.0%	1.0%	1.0%	1.0%	1.0%	1.0%	1.0%	1.0%
Background Traffic Growth	0	9	3	0	13	0	4	0	0	0	0	0
2016 TRAFFIC VOLUMES	**0**	**868**	**286**	**0**	**1319**	**0**	**416**	**0**	**8**	**0**	**0**	**0**
Years To Buildout (2019)	3	3	3	3	3	3	3	3	3	3	3	3
Yearly Growth Rate	1.0%	1.0%	1.0%	1.0%	1.0%	1.0%	1.0%	1.0%	1.0%	1.0%	1.0%	1.0%
Background Traffic Growth	0	26	9	0	40	0	13	0	0	0	0	0
Vested Traffic		47	23		73		36					
2019 NO-BUILD TRAFFIC VOLUMES	**0**	**941**	**317**	**0**	**1,432**	**0**	**465**	**0**	**8**	**0**	**0**	**0**
New Project Traffic		41	20		64		32					
Pass-By Project Traffic												
2019 BUILD TRAFFIC VOLUMES	**0**	**982**	**337**	**0**	**1,496**	**0**	**497**	**0**	**8**	**0**	**0**	**0**

INTERSECTION TRAFFIC VOLUME DEVELOPMENT

Maybank Highway & Folly Road

TRAFFIC CONTROL: Signalized

DATE COUNTED: Tuesday August 25, 2015

AM PEAK HOUR (7:45-8:45 AM)	EBL	EBT	EBR	WBL	WBT	WBR	NBL	NBT	NBR	SBL	SBT	SBR
2015 TRAFFIC VOLUMES	1296	1	0	5	1	11	0	1209	64	24	682	914
Years To Current (2016)	1	1	1	1	1	1	1	1	1	1	1	1
Yearly Growth Rate	1.0%	1.0%	1.0%	1.0%	1.0%	1.0%	1.0%	1.0%	1.0%	1.0%	1.0%	1.0%
Background Traffic Growth	13	0	0	0	0	0	0	12	1	0	7	9
2016 TRAFFIC VOLUMES	**1309**	**1**	**0**	**5**	**1**	**11**	**0**	**1221**	**65**	**24**	**689**	**923**
Years To Buildout (2019)	3	3	3	3	3	3	3	3	3	3	3	3
Yearly Growth Rate	1.0%	1.0%	1.0%	1.0%	1.0%	1.0%	1.0%	1.0%	1.0%	1.0%	1.0%	1.0%
Background Traffic Growth	40	0	0	0	0	0	0	37	2	1	21	28
Vested Traffic	66											27
2019 NO-BUILD TRAFFIC VOLUMES	**1,415**	**1**	**0**	**5**	**1**	**11**	**0**	**1,258**	**67**	**25**	**710**	**978**
New Project Traffic	59											21
Pass-By Project Traffic												
2019 BUILD TRAFFIC VOLUMES	**1,474**	**1**	**0**	**5**	**1**	**11**	**0**	**1,258**	**67**	**25**	**710**	**999**

PM PEAK HOUR (5:00-6:00 PM)	EBL	EBT	EBR	WBL	WBT	WBR	NBL	NBT	NBR	SBL	SBT	SBR
2015 TRAFFIC VOLUMES	1027	15	0	20	8	13	0	819	3	33	1963	1441
Years To Current (2016)	1	1	1	1	1	1	1	1	1	1	1	1
Yearly Growth Rate	1.0%	1.0%	1.0%	1.0%	1.0%	1.0%	1.0%	1.0%	1.0%	1.0%	1.0%	1.0%
Background Traffic Growth	10	0	0	0	0	0	0	8	0	0	20	14
2016 TRAFFIC VOLUMES	**1037**	**15**	**0**	**20**	**8**	**13**	**0**	**827**	**3**	**33**	**1983**	**1455**
Years To Buildout (2019)	3	3	3	3	3	3	3	3	3	3	3	3
Yearly Growth Rate	1.0%	1.0%	1.0%	1.0%	1.0%	1.0%	1.0%	1.0%	1.0%	1.0%	1.0%	1.0%
Background Traffic Growth	31	0	0	1	0	0	0	25	0	1	60	44
Vested Traffic	47											73
2019 NO-BUILD TRAFFIC VOLUMES	**1,116**	**16**	**0**	**21**	**8**	**14**	**0**	**852**	**3**	**34**	**2,043**	**1,573**
New Project Traffic	41											64
Pass-By Project Traffic												
2019 BUILD TRAFFIC VOLUMES	**1,157**	**16**	**0**	**21**	**8**	**14**	**0**	**852**	**3**	**34**	**2,043**	**1,637**

INTERSECTION TRAFFIC VOLUME DEVELOPMENT

Old Folly Road & Folly Road

TRAFFIC CONTROL: Signalized

DATE COUNTED: Wednesday August 26, 2015

AM PEAK HOUR (7:30-8:30 AM)	EBL	EBT	EBR	WBL	WBT	WBR	NBL	NBT	NBR	SBL	SBT	SBR
2015 TRAFFIC VOLUMES	0	0	277	0	0	0	264	1280	0	0	635	14
Years To Current (2016)	1	1	1	1	1	1	1	1	1	1	1	1
Yearly Growth Rate	1.0%	1.0%	1.0%	1.0%	1.0%	1.0%	1.0%	1.0%	1.0%	1.0%	1.0%	1.0%
Background Traffic Growth	0	0	3	0	0	0	3	13	0	0	6	0
2016 TRAFFIC VOLUMES	**0**	**0**	**280**	**0**	**0**	**0**	**267**	**1293**	**0**	**0**	**641**	**14**
Years To Buildout (2019)	3	3	3	3	3	3	3	3	3	3	3	3
Yearly Growth Rate	1.0%	1.0%	1.0%	1.0%	1.0%	1.0%	1.0%	1.0%	1.0%	1.0%	1.0%	1.0%
Background Traffic Growth	0	0	8	0	0	0	8	39	0	0	19	0
Vested Traffic			33				13					
2019 NO-BUILD TRAFFIC VOLUMES	**0**	**0**	**321**	**0**	**0**	**0**	**288**	**1,332**	**0**	**0**	**661**	**15**
New Project Traffic			29				10					
Pass-By Project Traffic												
2019 BUILD TRAFFIC VOLUMES	**0**	**0**	**350**	**0**	**0**	**0**	**298**	**1,332**	**0**	**0**	**661**	**15**

PM PEAK HOUR (4:45-5:45 PM)	EBL	EBT	EBR	WBL	WBT	WBR	NBL	NBT	NBR	SBL	SBT	SBR
2015 TRAFFIC VOLUMES	0	0	372	0	0	0	513	811	0	0	1380	21
Years To Current (2016)	1	1	1	1	1	1	1	1	1	1	1	1
Yearly Growth Rate	1.0%	1.0%	1.0%	1.0%	1.0%	1.0%	1.0%	1.0%	1.0%	1.0%	1.0%	1.0%
Background Traffic Growth	0	0	4	0	0	0	5	8	0	0	14	0
2016 TRAFFIC VOLUMES	**0**	**0**	**376**	**0**	**0**	**0**	**518**	**819**	**0**	**0**	**1394**	**21**
Years To Buildout (2019)	3	3	3	3	3	3	3	3	3	3	3	3
Yearly Growth Rate	1.0%	1.0%	1.0%	1.0%	1.0%	1.0%	1.0%	1.0%	1.0%	1.0%	1.0%	1.0%
Background Traffic Growth	0	0	11	0	0	0	16	25	0	0	42	1
Vested Traffic			23				36					
2019 NO-BUILD TRAFFIC VOLUMES	**0**	**0**	**410**	**0**	**0**	**0**	**570**	**844**	**0**	**0**	**1,436**	**22**
New Project Traffic			20				32					
Pass-By Project Traffic												
2019 BUILD TRAFFIC VOLUMES	**0**	**0**	**430**	**0**	**0**	**0**	**602**	**844**	**0**	**0**	**1,436**	**22**

INTERSECTION TRAFFIC VOLUME DEVELOPMENT

Fleming Road & Project Driveway

TRAFFIC CONTROL: Unsignalized

DATE COUNTED:

AM PEAK HOUR (7:30-8:30 AM)	EBL	EBT	EBR	WBL	WBT	WBR	NBL	NBT	NBR	SBL	SBT	SBR
2016 TRAFFIC VOLUMES								**99**			**59**	
Years To Current (2016)	1	1	1	1	1	1	1	1	1	1	1	1
Yearly Growth Rate	1.0%	1.0%	1.0%	1.0%	1.0%	1.0%	1.0%	1.0%	1.0%	1.0%	1.0%	1.0%
Background Traffic Growth	0	0	0	0	0	0	0	1	0	0	1	0
2016 TRAFFIC VOLUMES	**0**	**0**	**0**	**0**	**0**	**0**	**0**	**100**	**0**	**0**	**60**	**0**
Years To Buildout (2019)	3	3	3	3	3	3	3	3	3	3	3	3
Yearly Growth Rate	1.0%	1.0%	1.0%	1.0%	1.0%	1.0%	1.0%	1.0%	1.0%	1.0%	1.0%	1.0%
Background Traffic Growth	0	0	0	0	0	0	0	3	0	0	2	0
Vested Traffic						37				5		
2019 NO-BUILD TRAFFIC VOLUMES	**0**	**0**	**0**	**0**	**0**	**37**	**0**	**103**	**0**	**5**	**61**	**0**
New Project Traffic						19						
Pass-By Project Traffic												
2019 BUILD TRAFFIC VOLUMES	**0**	**0**	**0**	**0**	**0**	**56**	**0**	**103**	**0**	**5**	**61**	**0**

PM PEAK HOUR (4:15-5:15 PM)	EBL	EBT	EBR	WBL	WBT	WBR	NBL	NBT	NBR	SBL	SBT	SBR
2016 TRAFFIC VOLUMES								**100**			**105**	
Years To Current (2016)	1	1	1	1	1	1	1	1	1	1	1	1
Yearly Growth Rate	1.0%	1.0%	1.0%	1.0%	1.0%	1.0%	1.0%	1.0%	1.0%	1.0%	1.0%	1.0%
Background Traffic Growth	0	0	0	0	0	0	0	1	0	0	1	0
2016 TRAFFIC VOLUMES	**0**	**0**	**0**	**0**	**0**	**0**	**0**	**101**	**0**	**0**	**106**	**0**
Years To Buildout (2019)	3	3	3	3	3	3	3	3	3	3	3	3
Yearly Growth Rate	1.0%	1.0%	1.0%	1.0%	1.0%	1.0%	1.0%	1.0%	1.0%	1.0%	1.0%	1.0%
Background Traffic Growth	0	0	0	0	0	0	0	3	0	0	3	0
Vested Traffic						20				17		
2019 NO-BUILD TRAFFIC VOLUMES	**0**	**0**	**0**	**0**	**0**	**20**	**0**	**104**	**0**	**17**	**109**	**0**
New Project Traffic						13						
Pass-By Project Traffic												
2019 BUILD TRAFFIC VOLUMES	**0**	**0**	**0**	**0**	**0**	**33**	**0**	**104**	**0**	**17**	**109**	**0**

Appendix D

Analysis Worksheets (2016 Existing Conditions)

Intersection	
Int Delay, s/veh	2

Movement	EBT	EBR	WBL	WBT	NBL	NBR
Traffic Vol, veh/h	1671	26	33	664	17	83
Future Vol, veh/h	1671	26	33	664	17	83
Conflicting Peds, #/hr	0	0	0	0	0	0
Sign Control	Free	Free	Free	Free	Stop	Stop
RT Channelized	-	None	-	None	-	None
Storage Length	-	-	100	-	0	-
Veh in Median Storage, #	0	-	-	0	2	-
Grade, %	0	-	-	0	0	-
Peak Hour Factor	90	90	90	90	90	90
Heavy Vehicles, %	2	2	2	2	2	2
Mvmt Flow	1857	29	37	738	19	92

Major/Minor	Major1		Major2		Minor1	
Conflicting Flow All	0	0	1886	0	2313	943
Stage 1	-	-	-	-	1871	-
Stage 2	-	-	-	-	442	-
Critical Hdwy	-	-	4.14	-	6.84	6.94
Critical Hdwy Stg 1	-	-	-	-	5.84	-
Critical Hdwy Stg 2	-	-	-	-	5.84	-
Follow-up Hdwy	-	-	2.22	-	3.52	3.32
Pot Cap-1 Maneuver	-	-	314	-	32	264
Stage 1	-	-	-	-	107	-
Stage 2	-	-	-	-	615	-
Platoon blocked, %	-	-		-		
Mov Cap-1 Maneuver	-	-	314	-	28	264
Mov Cap-2 Maneuver	-	-	-	-	88	-
Stage 1	-	-	-	-	107	-
Stage 2	-	-	-	-	543	-

Approach	EB	WB	NB
HCM Control Delay, s	0	0.9	44.6
HCM LOS			E

Minor Lane/Major Mvmt	NBLn1	EBT	EBR	WBL	WBT
Capacity (veh/h)	197	-	-	314	-
HCM Lane V/C Ratio	0.564	-	-	0.117	-
HCM Control Delay (s)	44.6	-	-	18	-
HCM Lane LOS	E	-	-	C	-
HCM 95th %tile Q(veh)	3	-	-	0.4	-

Intersection	
Int Delay, s/veh	0

Movement	WBL	WBR	NBT	NBR	SBL	SBT
Traffic Vol, veh/h	0	0	100	0	0	60
Future Vol, veh/h	0	0	100	0	0	60
Conflicting Peds, #/hr	0	0	0	0	0	0
Sign Control	Stop	Stop	Free	Free	Free	Free
RT Channelized	-	None	-	None	-	None
Storage Length	0	-	-	-	-	-
Veh in Median Storage, #	0	-	0	-	-	0
Grade, %	0	-	0	-	-	0
Peak Hour Factor	90	90	90	90	90	90
Heavy Vehicles, %	2	2	2	2	2	2
Mvmt Flow	0	0	111	0	0	67

Major/Minor	Minor1		Major1		Major2	
Conflicting Flow All	178	111	0	0	111	0
Stage 1	111	-	-	-	-	-
Stage 2	67	-	-	-	-	-
Critical Hdwy	6.42	6.22	-	-	4.12	-
Critical Hdwy Stg 1	5.42	-	-	-	-	-
Critical Hdwy Stg 2	5.42	-	-	-	-	-
Follow-up Hdwy	3.518	3.318	-	-	2.218	-
Pot Cap-1 Maneuver	812	942	-	-	1479	-
Stage 1	914	-	-	-	-	-
Stage 2	956	-	-	-	-	-
Platoon blocked, %			-	-		-
Mov Cap-1 Maneuver	812	942	-	-	1479	-
Mov Cap-2 Maneuver	812	-	-	-	-	-
Stage 1	914	-	-	-	-	-
Stage 2	956	-	-	-	-	-

Approach	WB	NB	SB
HCM Control Delay, s	0	0	0
HCM LOS	A		

Minor Lane/Major Mvmt	NBT	NBR	WBLn1	SBL	SBT
Capacity (veh/h)	-	-	-	1479	-
HCM Lane V/C Ratio	-	-	-	-	-
HCM Control Delay (s)	-	-	0	0	-
HCM Lane LOS	-	-	A	A	-
HCM 95th %tile Q(veh)	-	-	-	0	-

Intersection	
Int Delay, s/veh	0

Movement	EBT	EBR	WBL	WBT	NBL	NBR
Traffic Vol, veh/h	1642	0	0	926	0	0
Future Vol, veh/h	1642	0	0	926	0	0
Conflicting Peds, #/hr	0	0	0	0	0	0
Sign Control	Free	Free	Free	Free	Stop	Stop
RT Channelized	-	None	-	None	-	None
Storage Length	-	-	150	-	0	-
Veh in Median Storage, #	0	-	-	0	2	-
Grade, %	0	-	-	0	0	-
Peak Hour Factor	90	90	90	90	90	90
Heavy Vehicles, %	2	2	2	2	2	2
Mvmt Flow	1824	0	0	1029	0	0

Major/Minor	Major1		Major2		Minor1	
Conflicting Flow All	0	0	1824	0	2338	912
Stage 1	-	-	-	-	1824	-
Stage 2	-	-	-	-	514	-
Critical Hdwy	-	-	4.14	-	6.84	6.94
Critical Hdwy Stg 1	-	-	-	-	5.84	-
Critical Hdwy Stg 2	-	-	-	-	5.84	-
Follow-up Hdwy	-	-	2.22	-	3.52	3.32
Pot Cap-1 Maneuver	-	-	332	-	31	276
Stage 1	-	-	-	-	114	-
Stage 2	-	-	-	-	565	-
Platoon blocked, %	-	-		-		
Mov Cap-1 Maneuver	-	-	332	-	31	276
Mov Cap-2 Maneuver	-	-	-	-	94	-
Stage 1	-	-	-	-	114	-
Stage 2	-	-	-	-	565	-

Approach	EB	WB	NB
HCM Control Delay, s	0	0	0
HCM LOS			A

Minor Lane/Major Mvmt	NBLn1	EBT	EBR	WBL	WBT
Capacity (veh/h)	-	-	-	332	-
HCM Lane V/C Ratio	-	-	-	-	-
HCM Control Delay (s)	0	-	-	0	-
HCM Lane LOS	A	-	-	A	-
HCM 95th %tile Q(veh)	-	-	-	0	-

Movement	EBL	EBT	EBR	WBL	WBT	WBR	NBL	NBT	NBR	SBL	SBT	SBR
Lane Configurations												
Traffic Volume (veh/h)	43	1588	11	26	895	122	27	9	11	26	1	4
Future Volume (veh/h)	43	1588	11	26	895	122	27	9	11	26	1	4
Number	3	8	18	7	4	14	1	6	16	5	2	12
Initial Q (Qb), veh	0	0	0	0	0	0	0	0	0	0	0	0
Ped-Bike Adj(A_pbT)	1.00		1.00	1.00		1.00	1.00		1.00	1.00		1.00
Parking Bus, Adj	1.00	1.00	1.00	1.00	1.00	1.00	1.00	1.00	1.00	1.00	1.00	1.00
Adj Sat Flow, veh/h/ln	1863	1863	1900	1863	1863	1863	1900	1863	1900	1900	1863	1863
Adj Flow Rate, veh/h	47	1726	12	28	973	133	29	10	12	28	1	4
Adj No. of Lanes	1	2	0	1	2	1	0	1	0	0	1	1
Peak Hour Factor	0.92	0.92	0.92	0.92	0.92	0.92	0.92	0.92	0.92	0.92	0.92	0.92
Percent Heavy Veh, %	2	2	2	2	2	2	2	2	2	2	2	2
Cap, veh/h	420	2386	17	246	2344	1049	181	41	32	275	7	141
Arrive On Green	0.66	0.66	0.66	0.66	0.66	0.66	0.09	0.09	0.09	0.09	0.09	0.09
Sat Flow, veh/h	508	3603	25	277	3539	1583	718	464	364	1443	82	1583
Grp Volume(v), veh/h	47	847	891	28	973	133	51	0	0	29	0	4
Grp Sat Flow(s),veh/h/ln	508	1770	1858	277	1770	1583	1546	0	0	1526	0	1583
Q Serve(g_s), s	2.3	15.0	15.0	3.5	6.2	1.5	0.7	0.0	0.0	0.0	0.0	0.1
Cycle Q Clear(g_c), s	8.5	15.0	15.0	18.5	6.2	1.5	1.4	0.0	0.0	0.7	0.0	0.1
Prop In Lane	1.00		0.01	1.00		1.00	0.57		0.24	0.97		1.00
Lane Grp Cap(c), veh/h	420	1172	1231	246	2344	1049	255	0	0	283	0	141
V/C Ratio(X)	0.11	0.72	0.72	0.11	0.42	0.13	0.20	0.00	0.00	0.10	0.00	0.03
Avail Cap(c_a), veh/h	420	1172	1231	246	2345	1049	622	0	0	621	0	524
HCM Platoon Ratio	1.00	1.00	1.00	1.00	1.00	1.00	1.00	1.00	1.00	1.00	1.00	1.00
Upstream Filter(I)	1.00	1.00	1.00	1.00	1.00	1.00	1.00	0.00	0.00	1.00	0.00	1.00
Uniform Delay (d), s/veh	5.8	5.3	5.3	11.3	3.8	3.0	20.7	0.0	0.0	20.4	0.0	20.1
Incr Delay (d2), s/veh	0.1	2.2	2.1	0.2	0.1	0.1	0.4	0.0	0.0	0.2	0.0	0.1
Initial Q Delay(d3),s/veh	0.0	0.0	0.0	0.0	0.0	0.0	0.0	0.0	0.0	0.0	0.0	0.0
%ile BackOfQ(50%),veh/ln	0.3	7.8	8.2	0.3	3.0	0.6	0.7	0.0	0.0	0.4	0.0	0.1
LnGrp Delay(d),s/veh	5.9	7.5	7.4	11.5	3.9	3.1	21.0	0.0	0.0	20.5	0.0	20.2
LnGrp LOS	A	A	A	B	A	A	C			C		C
Approach Vol, veh/h		1785			1134			51			33	
Approach Delay, s/veh		7.4			4.0			21.0			20.5	
Approach LOS		A			A			C			C	

Timer	1	2	3	4	5	6	7	8
Assigned Phs		2		4		6		8
Phs Duration (G+Y+Rc), s		10.3		38.0		10.3		38.0
Change Period (Y+Rc), s		6.0		6.0		6.0		6.0
Max Green Setting (Gmax), s		16.0		32.0		16.0		32.0
Max Q Clear Time (g_c+I1), s		2.7		20.5		3.4		17.0
Green Ext Time (p_c), s		0.9		11.4		0.9		15.0

Intersection Summary	
HCM 2010 Ctrl Delay	6.5
HCM 2010 LOS	A

Movement	EBT	EBR	WBL	WBT	NBL	NBR
Lane Configurations						
Traffic Volume (veh/h)	1163	253	0	648	241	2
Future Volume (veh/h)	1163	253	0	648	241	2
Number	8	18	7	4	1	16
Initial Q (Qb), veh	0	0	0	0	0	0
Ped-Bike Adj(A_pbT)		1.00	1.00		1.00	1.00
Parking Bus, Adj	1.00	1.00	1.00	1.00	1.00	1.00
Adj Sat Flow, veh/h/ln	1863	1900	0	1863	1863	1900
Adj Flow Rate, veh/h	1199	261	0	668	250	0
Adj No. of Lanes	2	0	0	2	2	1
Peak Hour Factor	0.97	0.97	0.97	0.97	0.97	0.97
Percent Heavy Veh, %	2	2	0	2	2	0
Cap, veh/h	1851	399	0	2261	427	194
Arrive On Green	0.64	0.64	0.00	0.64	0.12	0.00
Sat Flow, veh/h	2990	625	0	3725	3548	1615
Grp Volume(v), veh/h	728	732	0	668	250	0
Grp Sat Flow(s),veh/h/ln	1770	1752	0	1770	1774	1615
Q Serve(g_s), s	12.6	12.9	0.0	4.2	3.3	0.0
Cycle Q Clear(g_c), s	12.6	12.9	0.0	4.2	3.3	0.0
Prop In Lane		0.36	0.00		1.00	1.00
Lane Grp Cap(c), veh/h	1131	1120	0	2261	427	194
V/C Ratio(X)	0.64	0.65	0.00	0.30	0.59	0.00
Avail Cap(c_a), veh/h	1136	1125	0	2273	1139	518
HCM Platoon Ratio	1.00	1.00	1.00	1.00	1.00	1.00
Upstream Filter(I)	1.00	1.00	0.00	1.00	1.00	0.00
Uniform Delay (d), s/veh	5.5	5.6	0.0	4.0	20.7	0.0
Incr Delay (d2), s/veh	1.2	1.4	0.0	0.1	1.3	0.0
Initial Q Delay(d3),s/veh	0.0	0.0	0.0	0.0	0.0	0.0
%ile BackOfQ(50%),veh/ln	6.3	6.5	0.0	2.0	1.7	0.0
LnGrp Delay(d),s/veh	6.8	6.9	0.0	4.1	22.0	0.0
LnGrp LOS	A	A		A	C	
Approach Vol, veh/h	1460			668	250	
Approach Delay, s/veh	6.9			4.1	22.0	
Approach LOS	A			A	C	

Timer	1	2	3	4	5	6	7	8
Assigned Phs				4		6		8
Phs Duration (G+Y+Rc), s				37.8		12.0		37.8
Change Period (Y+Rc), s				6.0		6.0		6.0
Max Green Setting (Gmax), s				32.0		16.0		32.0
Max Q Clear Time (g_c+I1), s				6.2		5.3		14.9
Green Ext Time (p_c), s				25.5		0.7		16.9

Intersection Summary	
HCM 2010 Ctrl Delay	7.7
HCM 2010 LOS	A

Notes

Movement	NBL	NBT	NBR	SBL	SBT	SBR	NEL	NET	NER	SWL	SWT	SWR
Lane Configurations												
Traffic Volume (veh/h)	0	1221	65	24	689	923	1309	1	0	5	1	11
Future Volume (veh/h)	0	1221	65	24	689	923	1309	1	0	5	1	11
Number	1	6	16	5	2	12	3	8	18	7	4	14
Initial Q (Qb), veh	0	0	0	0	0	0	0	0	0	0	0	0
Ped-Bike Adj(A_pbT)	1.00		1.00	1.00		1.00	1.00		1.00	1.00		1.00
Parking Bus, Adj	1.00	1.00	1.00	1.00	1.00	1.00	1.00	1.00	1.00	1.00	1.00	1.00
Adj Sat Flow, veh/h/ln	0	1863	1900	1863	1863	1863	1863	1863	0	1863	1863	1863
Adj Flow Rate, veh/h	0	1285	68	25	725	972	1379	0	0	5	1	0
Adj No. of Lanes	0	2	0	1	2	1	2	1	0	1	1	1
Peak Hour Factor	0.95	0.95	0.95	0.95	0.95	0.95	0.95	0.95	0.95	0.95	0.95	0.95
Percent Heavy Veh, %	0	2	2	2	2	2	2	2	0	2	2	2
Cap, veh/h	0	1366	72	104	1646	1349	1372	720	0	11	11	10
Arrive On Green	0.00	0.40	0.40	0.02	0.47	0.47	0.39	0.00	0.00	0.01	0.01	0.00
Sat Flow, veh/h	0	3513	181	1774	3539	1583	3548	1863	0	1774	1863	1583
Grp Volume(v), veh/h	0	664	689	25	725	972	1379	0	0	5	1	0
Grp Sat Flow(s),veh/h/ln	0	1770	1831	1774	1770	1583	1774	1863	0	1774	1863	1583
Q Serve(g_s), s	0.0	45.7	45.9	1.0	17.5	29.8	49.0	0.0	0.0	0.4	0.1	0.0
Cycle Q Clear(g_c), s	0.0	45.7	45.9	1.0	17.5	29.8	49.0	0.0	0.0	0.4	0.1	0.0
Prop In Lane	0.00		0.10	1.00		1.00	1.00		0.00	1.00		1.00
Lane Grp Cap(c), veh/h	0	707	731	104	1646	1349	1372	720	0	11	11	10
V/C Ratio(X)	0.00	0.94	0.94	0.24	0.44	0.72	1.00	0.00	0.00	0.47	0.09	0.00
Avail Cap(c_a), veh/h	0	707	731	198	1732	1387	1372	720	0	224	235	200
HCM Platoon Ratio	1.00	1.00	1.00	1.00	1.00	1.00	1.00	1.00	1.00	1.00	1.00	1.00
Upstream Filter(I)	0.00	1.00	1.00	1.00	1.00	1.00	1.00	0.00	0.00	1.00	1.00	0.00
Uniform Delay (d), s/veh	0.0	36.6	36.6	30.3	22.8	3.6	38.8	0.0	0.0	62.8	62.6	0.0
Incr Delay (d2), s/veh	0.0	20.5	20.5	1.2	0.2	1.8	25.5	0.0	0.0	28.8	3.4	0.0
Initial Q Delay(d3),s/veh	0.0	0.0	0.0	0.0	0.0	0.0	0.0	0.0	0.0	0.0	0.0	0.0
%ile BackOfQ(50%),veh/ln	0.0	26.3	27.3	0.5	8.6	34.4	28.7	0.0	0.0	0.3	0.0	0.0
LnGrp Delay(d),s/veh	0.0	57.1	57.1	31.4	23.0	5.4	64.3	0.0	0.0	91.5	66.0	0.0
LnGrp LOS		E	E	C	C	A	F			F	E	
Approach Vol, veh/h		1353			1722			1379			6	
Approach Delay, s/veh		57.1			13.2			64.3			87.3	
Approach LOS		E			B			E			F	

Timer	1	2	3	4	5	6	7	8
Assigned Phs		2		4	5	6		8
Phs Duration (G+Y+Rc), s		64.9		6.8	8.3	56.6		55.0
Change Period (Y+Rc), s		6.0		6.0	6.0	6.0		6.0
Max Green Setting (Gmax), s		62.0		16.0	9.0	47.0		49.0
Max Q Clear Time (g_c+I1), s		31.8		2.4	3.0	47.9		51.0
Green Ext Time (p_c), s		27.1		0.0	0.0	0.0		0.0

Intersection Summary	
HCM 2010 Ctrl Delay	42.4
HCM 2010 LOS	D

Notes

Movement	EBL	EBR	NBL	NBT	SBT	SBR
Lane Configurations						
Traffic Volume (veh/h)	0	280	267	1293	641	14
Future Volume (veh/h)	0	280	267	1293	641	14
Number	3	18	1	6	2	12
Initial Q (Qb), veh	0	0	0	0	0	0
Ped-Bike Adj(A_pbT)	1.00	1.00	1.00			1.00
Parking Bus, Adj	1.00	1.00	1.00	1.00	1.00	1.00
Adj Sat Flow, veh/h/ln	0	1863	1863	1863	1863	1863
Adj Flow Rate, veh/h	0	292	278	1347	668	0
Adj No. of Lanes	0	1	1	2	2	1
Peak Hour Factor	0.96	0.96	0.96	0.96	0.96	0.96
Percent Heavy Veh, %	0	2	2	2	2	2
Cap, veh/h	0	0	743	2949	1967	880
Arrive On Green	0.00	0.00	0.11	0.83	0.56	0.00
Sat Flow, veh/h	0		1774	3632	3632	1583
Grp Volume(v), veh/h	0.0		278	1347	668	0
Grp Sat Flow(s),veh/h/ln			1774	1770	1770	1583
Q Serve(g_s), s			1.9	3.7	3.7	0.0
Cycle Q Clear(g_c), s			1.9	3.7	3.7	0.0
Prop In Lane			1.00			1.00
Lane Grp Cap(c), veh/h			743	2949	1967	880
V/C Ratio(X)			0.37	0.46	0.34	0.00
Avail Cap(c_a), veh/h			990	3146	1967	880
HCM Platoon Ratio			1.00	1.00	1.00	1.00
Upstream Filter(I)			1.00	1.00	1.00	0.00
Uniform Delay (d), s/veh			2.4	0.8	4.4	0.0
Incr Delay (d2), s/veh			0.3	0.1	0.1	0.0
Initial Q Delay(d3),s/veh			0.0	0.0	0.0	0.0
%ile BackOfQ(50%),veh/ln			0.8	1.7	1.8	0.0
LnGrp Delay(d),s/veh			2.7	0.9	4.5	0.0
LnGrp LOS			A	A	A	
Approach Vol, veh/h				1625	668	
Approach Delay, s/veh				1.2	4.5	
Approach LOS				A	A	

Timer	1	2	3	4	5	6	7	8
Assigned Phs	1	2				6		
Phs Duration (G+Y+Rc), s	10.0	26.0				36.0		
Change Period (Y+Rc), s	6.0	6.0				6.0		
Max Green Setting (Gmax), s	9.0	17.0				32.0		
Max Q Clear Time (g_c+I1), s	3.9	5.7				5.7		
Green Ext Time (p_c), s	0.4	11.1				24.3		

Intersection Summary	
HCM 2010 Ctrl Delay	2.2
HCM 2010 LOS	A

Intersection	
Int Delay, s/veh	1.5

Movement	EBT	EBR	WBL	WBT	NBL	NBR
Traffic Vol, veh/h	914	37	69	1479	46	55
Future Vol, veh/h	914	37	69	1479	46	55
Conflicting Peds, #/hr	0	0	0	0	0	0
Sign Control	Free	Free	Free	Free	Stop	Stop
RT Channelized	-	None	-	None	-	None
Storage Length	-	-	100	-	0	-
Veh in Median Storage, #	0	-	-	0	2	-
Grade, %	0	-	-	0	0	-
Peak Hour Factor	90	90	90	90	90	90
Heavy Vehicles, %	2	2	2	2	2	2
Mvmt Flow	1016	41	77	1643	51	61

Major/Minor	Major1		Major2		Minor1	
Conflicting Flow All	0	0	1057	0	2011	528
Stage 1	-	-	-	-	1036	-
Stage 2	-	-	-	-	975	-
Critical Hdwy	-	-	4.14	-	6.84	6.94
Critical Hdwy Stg 1	-	-	-	-	5.84	-
Critical Hdwy Stg 2	-	-	-	-	5.84	-
Follow-up Hdwy	-	-	2.22	-	3.52	3.32
Pot Cap-1 Maneuver	-	-	655	-	~ 51	495
Stage 1	-	-	-	-	303	-
Stage 2	-	-	-	-	326	-
Platoon blocked, %	-	-		-		
Mov Cap-1 Maneuver	-	-	655	-	~ 45	495
Mov Cap-2 Maneuver	-	-	-	-	155	-
Stage 1	-	-	-	-	303	-
Stage 2	-	-	-	-	288	-

Approach	EB	WB	NB
HCM Control Delay, s	0	0.5	31
HCM LOS			D

Minor Lane/Major Mvmt	NBLn1	EBT	EBR	WBL	WBT
Capacity (veh/h)	248	-	-	655	-
HCM Lane V/C Ratio	0.453	-	-	0.117	-
HCM Control Delay (s)	31	-	-	11.2	-
HCM Lane LOS	D	-	-	B	-
HCM 95th %tile Q(veh)	2.2	-	-	0.4	-

Notes

~: Volume exceeds capacity $: Delay exceeds 300s +: Computation Not Defined *: All major volume in platoon

Intersection	
Int Delay, s/veh	0

Movement	WBL	WBR	NBT	NBR	SBL	SBT
Traffic Vol, veh/h	0	0	101	0	0	106
Future Vol, veh/h	0	0	101	0	0	106
Conflicting Peds, #/hr	0	0	0	0	0	0
Sign Control	Stop	Stop	Free	Free	Free	Free
RT Channelized	-	None	-	None	-	None
Storage Length	0	-	-	-	-	-
Veh in Median Storage, #	0	-	0	-	-	0
Grade, %	0	-	0	-	-	0
Peak Hour Factor	90	90	90	90	90	90
Heavy Vehicles, %	2	2	2	2	2	2
Mvmt Flow	0	0	112	0	0	118

Major/Minor	Minor1		Major1		Major2	
Conflicting Flow All	230	112	0	0	112	0
Stage 1	112	-	-	-	-	-
Stage 2	118	-	-	-	-	-
Critical Hdwy	6.42	6.22	-	-	4.12	-
Critical Hdwy Stg 1	5.42	-	-	-	-	-
Critical Hdwy Stg 2	5.42	-	-	-	-	-
Follow-up Hdwy	3.518	3.318	-	-	2.218	-
Pot Cap-1 Maneuver	758	941	-	-	1478	-
Stage 1	913	-	-	-	-	-
Stage 2	907	-	-	-	-	-
Platoon blocked, %			-	-		-
Mov Cap-1 Maneuver	758	941	-	-	1478	-
Mov Cap-2 Maneuver	758	-	-	-	-	-
Stage 1	913	-	-	-	-	-
Stage 2	907	-	-	-	-	-

Approach	WB	NB	SB
HCM Control Delay, s	0	0	0
HCM LOS	A		

Minor Lane/Major Mvmt	NBT	NBR	WBLn1	SBL	SBT
Capacity (veh/h)	-	-	-	1478	-
HCM Lane V/C Ratio	-	-	-	-	-
HCM Control Delay (s)	-	-	0	0	-
HCM Lane LOS	-	-	A	A	-
HCM 95th %tile Q(veh)	-	-	-	0	-

Intersection	
Int Delay, s/veh	0

Movement	EBT	EBR	WBL	WBT	NBL	NBR
Traffic Vol, veh/h	1001	0	0	1603	0	0
Future Vol, veh/h	1001	0	0	1603	0	0
Conflicting Peds, #/hr	0	0	0	0	0	0
Sign Control	Free	Free	Free	Free	Stop	Stop
RT Channelized	-	None	-	None	-	None
Storage Length	-	-	150	-	0	-
Veh in Median Storage, #	0	-	-	0	2	-
Grade, %	0	-	-	0	0	-
Peak Hour Factor	90	90	90	90	90	90
Heavy Vehicles, %	2	2	2	2	2	2
Mvmt Flow	1112	0	0	1781	0	0

Major/Minor	Major1		Major2		Minor1	
Conflicting Flow All	0	0	1112	0	2003	556
Stage 1	-	-	-	-	1112	-
Stage 2	-	-	-	-	891	-
Critical Hdwy	-	-	4.14	-	6.84	6.94
Critical Hdwy Stg 1	-	-	-	-	5.84	-
Critical Hdwy Stg 2	-	-	-	-	5.84	-
Follow-up Hdwy	-	-	2.22	-	3.52	3.32
Pot Cap-1 Maneuver	-	-	624	-	52	475
Stage 1	-	-	-	-	276	-
Stage 2	-	-	-	-	361	-
Platoon blocked, %	-	-		-		
Mov Cap-1 Maneuver	-	-	624	-	52	475
Mov Cap-2 Maneuver	-	-	-	-	166	-
Stage 1	-	-	-	-	276	-
Stage 2	-	-	-	-	361	-

Approach	EB	WB	NB
HCM Control Delay, s	0	0	0
HCM LOS			A

Minor Lane/Major Mvmt	NBLn1	EBT	EBR	WBL	WBT
Capacity (veh/h)	-	-	-	624	-
HCM Lane V/C Ratio	-	-	-	-	-
HCM Control Delay (s)	0	-	-	0	-
HCM Lane LOS	A	-	-	A	-
HCM 95th %tile Q(veh)	-	-	-	0	-

Movement	EBL	EBT	EBR	WBL	WBT	WBR	NBL	NBT	NBR	SBL	SBT	SBR
Lane Configurations												
Traffic Volume (veh/h)	30	938	32	25	1530	42	53	3	4	203	0	20
Future Volume (veh/h)	30	938	32	25	1530	42	53	3	4	203	0	20
Number	3	8	18	7	4	14	1	6	16	5	2	12
Initial Q (Qb), veh	0	0	0	0	0	0	0	0	0	0	0	0
Ped-Bike Adj(A_pbT)	1.00		1.00	1.00		1.00	1.00		1.00	1.00		1.00
Parking Bus, Adj	1.00	1.00	1.00	1.00	1.00	1.00	1.00	1.00	1.00	1.00	1.00	1.00
Adj Sat Flow, veh/h/ln	1863	1863	1900	1863	1863	1863	1900	1863	1900	1900	1863	1863
Adj Flow Rate, veh/h	33	1020	35	27	1663	46	58	3	4	221	0	22
Adj No. of Lanes	1	2	0	1	2	1	0	1	0	0	1	1
Peak Hour Factor	0.92	0.92	0.92	0.92	0.92	0.92	0.92	0.92	0.92	0.92	0.92	0.92
Percent Heavy Veh, %	2	2	2	2	2	2	2	2	2	2	2	2
Cap, veh/h	177	1966	67	331	1993	892	255	14	10	485	0	357
Arrive On Green	0.56	0.56	0.56	0.56	0.56	0.56	0.23	0.23	0.23	0.23	0.00	0.23
Sat Flow, veh/h	285	3491	120	533	3539	1583	600	64	43	1586	0	1583
Grp Volume(v), veh/h	33	517	538	27	1663	46	65	0	0	221	0	22
Grp Sat Flow(s),veh/h/ln	285	1770	1842	533	1770	1583	707	0	0	1586	0	1583
Q Serve(g_s), s	6.1	10.2	10.2	1.9	22.0	0.7	2.1	0.0	0.0	0.0	0.0	0.6
Cycle Q Clear(g_c), s	28.1	10.2	10.2	12.1	22.0	0.7	8.8	0.0	0.0	6.7	0.0	0.6
Prop In Lane	1.00		0.07	1.00		1.00	0.89		0.06	1.00		1.00
Lane Grp Cap(c), veh/h	177	997	1037	331	1993	892	279	0	0	485	0	357
V/C Ratio(X)	0.19	0.52	0.52	0.08	0.83	0.05	0.23	0.00	0.00	0.46	0.00	0.06
Avail Cap(c_a), veh/h	177	997	1037	331	1993	892	358	0	0	563	0	446
HCM Platoon Ratio	1.00	1.00	1.00	1.00	1.00	1.00	1.00	1.00	1.00	1.00	1.00	1.00
Upstream Filter(I)	1.00	1.00	1.00	1.00	1.00	1.00	1.00	0.00	0.00	1.00	0.00	1.00
Uniform Delay (d), s/veh	21.8	7.7	7.7	11.4	10.2	5.6	22.7	0.0	0.0	19.6	0.0	17.3
Incr Delay (d2), s/veh	0.5	0.5	0.5	0.1	3.2	0.0	0.4	0.0	0.0	0.7	0.0	0.1
Initial Q Delay(d3),s/veh	0.0	0.0	0.0	0.0	0.0	0.0	0.0	0.0	0.0	0.0	0.0	0.0
%ile BackOfQ(50%),veh/ln	0.5	5.0	5.2	0.3	11.5	0.3	1.0	0.0	0.0	3.2	0.0	0.3
LnGrp Delay(d),s/veh	22.3	8.1	8.1	11.5	13.5	5.6	23.1	0.0	0.0	20.3	0.0	17.3
LnGrp LOS	C	A	A	B	B	A	C			C		B
Approach Vol, veh/h		1088			1736			65			243	
Approach Delay, s/veh		8.6			13.2			23.1			20.0	
Approach LOS		A			B			C			C	

Timer	1	2	3	4	5	6	7	8
Assigned Phs		2		4		6		8
Phs Duration (G+Y+Rc), s		18.8		38.0		18.8		38.0
Change Period (Y+Rc), s		6.0		6.0		6.0		6.0
Max Green Setting (Gmax), s		16.0		32.0		16.0		32.0
Max Q Clear Time (g_c+I1), s		8.7		24.0		10.8		30.1
Green Ext Time (p_c), s		2.7		8.0		2.0		1.9

Intersection Summary	
HCM 2010 Ctrl Delay	12.3
HCM 2010 LOS	B

Movement	EBT	EBR	WBL	WBT	NBL	NBR
Lane Configurations						
Traffic Volume (veh/h)	868	286	0	1319	416	8
Future Volume (veh/h)	868	286	0	1319	416	8
Number	8	18	7	4	1	16
Initial Q (Qb), veh	0	0	0	0	0	0
Ped-Bike Adj(A_pbT)		1.00	1.00		1.00	1.00
Parking Bus, Adj	1.00	1.00	1.00	1.00	1.00	1.00
Adj Sat Flow, veh/h/ln	1863	1900	0	1863	1863	1900
Adj Flow Rate, veh/h	886	292	0	1346	431	0
Adj No. of Lanes	2	0	0	2	2	1
Peak Hour Factor	0.98	0.98	0.98	0.98	0.98	0.98
Percent Heavy Veh, %	2	2	0	2	2	0
Cap, veh/h	1487	489	0	2009	639	291
Arrive On Green	0.57	0.57	0.00	0.57	0.18	0.00
Sat Flow, veh/h	2712	861	0	3725	3548	1615
Grp Volume(v), veh/h	598	580	0	1346	431	0
Grp Sat Flow(s),veh/h/ln	1770	1711	0	1770	1774	1615
Q Serve(g_s), s	10.5	10.5	0.0	12.6	5.4	0.0
Cycle Q Clear(g_c), s	10.5	10.5	0.0	12.6	5.4	0.0
Prop In Lane		0.50	0.00		1.00	1.00
Lane Grp Cap(c), veh/h	1004	971	0	2009	639	291
V/C Ratio(X)	0.60	0.60	0.00	0.67	0.67	0.00
Avail Cap(c_a), veh/h	1005	972	0	2011	1194	544
HCM Platoon Ratio	1.00	1.00	1.00	1.00	1.00	1.00
Upstream Filter(I)	1.00	1.00	0.00	1.00	1.00	0.00
Uniform Delay (d), s/veh	6.7	6.7	0.0	7.2	18.2	0.0
Incr Delay (d2), s/veh	1.0	1.0	0.0	0.9	1.3	0.0
Initial Q Delay(d3),s/veh	0.0	0.0	0.0	0.0	0.0	0.0
%ile BackOfQ(50%),veh/ln	5.2	5.1	0.0	6.2	2.7	0.0
LnGrp Delay(d),s/veh	7.7	7.7	0.0	8.0	19.4	0.0
LnGrp LOS	A	A		A	B	
Approach Vol, veh/h	1178			1346	431	
Approach Delay, s/veh	7.7			8.0	19.4	
Approach LOS	A			A	B	

Timer	1	2	3	4	5	6	7	8
Assigned Phs				4		6		8
Phs Duration (G+Y+Rc), s				33.0		14.6		33.0
Change Period (Y+Rc), s				6.0		6.0		6.0
Max Green Setting (Gmax), s				27.0		16.0		27.0
Max Q Clear Time (g_c+I1), s				14.6		7.4		12.5
Green Ext Time (p_c), s				12.4		1.2		14.4

Intersection Summary	
HCM 2010 Ctrl Delay	9.6
HCM 2010 LOS	A

Notes

Movement	NBL	NBT	NBR	SBL	SBT	SBR	NEL	NET	NER	SWL	SWT	SWR
Lane Configurations												
Traffic Volume (veh/h)	0	827	3	33	1983	1455	1037	15	0	20	8	13
Future Volume (veh/h)	0	827	3	33	1983	1455	1037	15	0	20	8	13
Number	1	6	16	5	2	12	3	8	18	7	4	14
Initial Q (Qb), veh	0	0	0	0	0	0	0	0	0	0	0	0
Ped-Bike Adj(A_pbT)	1.00		1.00	1.00		1.00	1.00		1.00	1.00		1.00
Parking Bus, Adj	1.00	1.00	1.00	1.00	1.00	1.00	1.00	1.00	1.00	1.00	1.00	1.00
Adj Sat Flow, veh/h/ln	0	1863	1900	1863	1863	1863	1863	1863	0	1863	1863	1863
Adj Flow Rate, veh/h	0	861	3	34	2066	1516	1091	0	0	21	8	0
Adj No. of Lanes	0	2	0	1	2	1	2	1	0	1	1	1
Peak Hour Factor	0.96	0.96	0.96	0.96	0.96	0.96	0.96	0.96	0.96	0.96	0.96	0.96
Percent Heavy Veh, %	0	2	2	2	2	2	2	2	0	2	2	2
Cap, veh/h	0	1736	6	295	1936	1335	1051	552	0	35	37	31
Arrive On Green	0.00	0.48	0.48	0.02	0.55	0.55	0.30	0.00	0.00	0.02	0.02	0.00
Sat Flow, veh/h	0	3711	13	1774	3539	1583	3548	1863	0	1774	1863	1583
Grp Volume(v), veh/h	0	421	443	34	2066	1516	1091	0	0	21	8	0
Grp Sat Flow(s),veh/h/ln	0	1770	1861	1774	1770	1583	1774	1863	0	1774	1863	1583
Q Serve(g_s), s	0.0	21.4	21.4	1.2	72.0	72.0	39.0	0.0	0.0	1.5	0.6	0.0
Cycle Q Clear(g_c), s	0.0	21.4	21.4	1.2	72.0	72.0	39.0	0.0	0.0	1.5	0.6	0.0
Prop In Lane	0.00		0.01	1.00		1.00	1.00		0.00	1.00		1.00
Lane Grp Cap(c), veh/h	0	849	893	295	1936	1335	1051	552	0	35	37	31
V/C Ratio(X)	0.00	0.50	0.50	0.12	1.07	1.14	1.04	0.00	0.00	0.60	0.22	0.00
Avail Cap(c_a), veh/h	0	849	893	378	1936	1335	1051	552	0	216	226	192
HCM Platoon Ratio	1.00	1.00	1.00	1.00	1.00	1.00	1.00	1.00	1.00	1.00	1.00	1.00
Upstream Filter(I)	0.00	1.00	1.00	1.00	1.00	1.00	1.00	0.00	0.00	1.00	1.00	0.00
Uniform Delay (d), s/veh	0.0	23.4	23.4	17.9	29.8	7.3	46.3	0.0	0.0	64.0	63.5	0.0
Incr Delay (d2), s/veh	0.0	0.4	0.4	0.2	41.1	70.6	38.0	0.0	0.0	15.0	2.9	0.0
Initial Q Delay(d3),s/veh	0.0	0.0	0.0	0.0	0.0	0.0	0.0	0.0	0.0	0.0	0.0	0.0
%ile BackOfQ(50%),veh/ln	0.0	10.5	11.1	0.6	46.0	74.4	24.5	0.0	0.0	0.9	0.3	0.0
LnGrp Delay(d),s/veh	0.0	23.8	23.8	18.0	70.9	77.9	84.3	0.0	0.0	79.0	66.4	0.0
LnGrp LOS		C	C	B	F	F	F			E	E	
Approach Vol, veh/h		864			3616			1091			29	
Approach Delay, s/veh		23.8			73.3			84.3			75.5	
Approach LOS		C			E			F			E	

Timer	1	2	3	4	5	6	7	8
Assigned Phs		2		4	5	6		8
Phs Duration (G+Y+Rc), s		78.0		8.6	8.8	69.2		45.0
Change Period (Y+Rc), s		6.0		6.0	6.0	6.0		6.0
Max Green Setting (Gmax), s		72.0		16.0	9.0	57.0		39.0
Max Q Clear Time (g_c+I1), s		74.0		3.5	3.2	23.4		41.0
Green Ext Time (p_c), s		0.0		0.1	0.0	33.5		0.0

Intersection Summary	
HCM 2010 Ctrl Delay	67.8
HCM 2010 LOS	E

Notes

Movement	EBL	EBR	NBL	NBT	SBT	SBR
Lane Configurations						
Traffic Volume (veh/h)	0	376	518	819	1394	21
Future Volume (veh/h)	0	376	518	819	1394	21
Number	3	18	1	6	2	12
Initial Q (Qb), veh	0	0	0	0	0	0
Ped-Bike Adj(A_pbT)	1.00	1.00	1.00			1.00
Parking Bus, Adj	1.00	1.00	1.00	1.00	1.00	1.00
Adj Sat Flow, veh/h/ln	0	1863	1863	1863	1863	1863
Adj Flow Rate, veh/h	0	388	534	844	1437	0
Adj No. of Lanes	0	1	1	2	2	1
Peak Hour Factor	0.97	0.97	0.97	0.97	0.97	0.97
Percent Heavy Veh, %	0	2	2	2	2	2
Cap, veh/h	0	0	602	3198	2131	953
Arrive On Green	0.00	0.00	0.21	0.90	0.60	0.00
Sat Flow, veh/h	0		1774	3632	3632	1583
Grp Volume(v), veh/h	0.0		534	844	1437	0
Grp Sat Flow(s),veh/h/ln			1774	1770	1770	1583
Q Serve(g_s), s			9.4	1.9	16.9	0.0
Cycle Q Clear(g_c), s			9.4	1.9	16.9	0.0
Prop In Lane			1.00			1.00
Lane Grp Cap(c), veh/h			602	3198	2131	953
V/C Ratio(X)			0.89	0.26	0.67	0.00
Avail Cap(c_a), veh/h			836	3524	2131	953
HCM Platoon Ratio			1.00	1.00	1.00	1.00
Upstream Filter(I)			1.00	1.00	1.00	0.00
Uniform Delay (d), s/veh			14.5	0.4	8.3	0.0
Incr Delay (d2), s/veh			8.7	0.0	0.9	0.0
Initial Q Delay(d3),s/veh			0.0	0.0	0.0	0.0
%ile BackOfQ(50%),veh/ln			10.1	0.8	8.4	0.0
LnGrp Delay(d),s/veh			23.2	0.4	9.2	0.0
LnGrp LOS			C	A	A	
Approach Vol, veh/h				1378	1437	
Approach Delay, s/veh				9.2	9.2	
Approach LOS				A	A	

Timer	1	2	3	4	5	6	7	8
Assigned Phs	1	2				6		
Phs Duration (G+Y+Rc), s	8.8	43.5				62.3		
Change Period (Y+Rc), s	6.0	6.0				6.0		
Max Green Setting (Gmax), s	2.0	35.0				62.0		
Max Q Clear Time (g_c+I1), s	1.4	18.9				3.9		
Green Ext Time (p_c), s	1.4	15.9				52.4		

Intersection Summary	
HCM 2010 Ctrl Delay	9.2
HCM 2010 LOS	A

Appendix E

Analysis Worksheets (2019 No Build Conditions)

Intersection	
Int Delay, s/veh	6.5

Movement	EBT	EBR	WBL	WBT	NBL	NBR
Traffic Vol, veh/h	1746	32	34	719	35	105
Future Vol, veh/h	1746	32	34	719	35	105
Conflicting Peds, #/hr	0	0	0	0	0	0
Sign Control	Free	Free	Free	Free	Stop	Stop
RT Channelized	-	None	-	None	-	None
Storage Length	-	-	100	-	0	-
Veh in Median Storage, #	0	-	-	0	2	-
Grade, %	0	-	-	0	0	-
Peak Hour Factor	90	90	90	90	90	90
Heavy Vehicles, %	2	2	2	2	2	2
Mvmt Flow	1940	36	38	799	39	117

Major/Minor	Major1		Major2		Minor1	
Conflicting Flow All	0	0	1976	0	2433	988
Stage 1	-	-	-	-	1958	-
Stage 2	-	-	-	-	475	-
Critical Hdwy	-	-	4.14	-	6.84	6.94
Critical Hdwy Stg 1	-	-	-	-	5.84	-
Critical Hdwy Stg 2	-	-	-	-	5.84	-
Follow-up Hdwy	-	-	2.22	-	3.52	3.32
Pot Cap-1 Maneuver	-	-	289	-	~ 26	246
Stage 1	-	-	-	-	96	-
Stage 2	-	-	-	-	592	-
Platoon blocked, %	-	-		-		
Mov Cap-1 Maneuver	-	-	289	-	~ 23	246
Mov Cap-2 Maneuver	-	-	-	-	79	-
Stage 1	-	-	-	-	96	-
Stage 2	-	-	-	-	514	-

Approach	EB	WB	NB
HCM Control Delay, s	0	0.9	118.6
HCM LOS			F

Minor Lane/Major Mvmt	NBLn1	EBT	EBR	WBL	WBT
Capacity (veh/h)	161	-	-	289	-
HCM Lane V/C Ratio	0.966	-	-	0.131	-
HCM Control Delay (s)	118.6	-	-	19.3	-
HCM Lane LOS	F	-	-	C	-
HCM 95th %tile Q(veh)	7.3	-	-	0.4	-

Notes

~: Volume exceeds capacity $: Delay exceeds 300s +: Computation Not Defined *: All major volume in platoon

Intersection	
Int Delay, s/veh	1.8

Movement	WBL	WBR	NBT	NBR	SBL	SBT
Traffic Vol, veh/h	0	37	103	0	5	61
Future Vol, veh/h	0	37	103	0	5	61
Conflicting Peds, #/hr	0	0	0	0	0	0
Sign Control	Stop	Stop	Free	Free	Free	Free
RT Channelized	-	None	-	None	-	None
Storage Length	0	-	-	-	-	-
Veh in Median Storage, #	0	-	0	-	-	0
Grade, %	0	-	0	-	-	0
Peak Hour Factor	90	90	90	90	90	90
Heavy Vehicles, %	2	2	2	2	2	2
Mvmt Flow	0	41	114	0	6	68

Major/Minor	Minor1		Major1		Major2	
Conflicting Flow All	193	114	0	0	114	0
Stage 1	114	-	-	-	-	-
Stage 2	79	-	-	-	-	-
Critical Hdwy	6.42	6.22	-	-	4.12	-
Critical Hdwy Stg 1	5.42	-	-	-	-	-
Critical Hdwy Stg 2	5.42	-	-	-	-	-
Follow-up Hdwy	3.518	3.318	-	-	2.218	-
Pot Cap-1 Maneuver	796	939	-	-	1475	-
Stage 1	911	-	-	-	-	-
Stage 2	944	-	-	-	-	-
Platoon blocked, %			-	-		-
Mov Cap-1 Maneuver	793	939	-	-	1475	-
Mov Cap-2 Maneuver	793	-	-	-	-	-
Stage 1	911	-	-	-	-	-
Stage 2	940	-	-	-	-	-

Approach	WB	NB	SB
HCM Control Delay, s	9	0	0.6
HCM LOS	A		

Minor Lane/Major Mvmt	NBT	NBR	WBLn1	SBL	SBT
Capacity (veh/h)	-	-	939	1475	-
HCM Lane V/C Ratio	-	-	0.044	0.004	-
HCM Control Delay (s)	-	-	9	7.5	0
HCM Lane LOS	-	-	A	A	A
HCM 95th %tile Q(veh)	-	-	0.1	0	-

Intersection	
Int Delay, s/veh	2.1

Movement	EBT	EBR	WBL	WBT	NBL	NBR
Traffic Vol, veh/h	1712	25	40	954	35	79
Future Vol, veh/h	1712	25	40	954	35	79
Conflicting Peds, #/hr	0	0	0	0	0	0
Sign Control	Free	Free	Free	Free	Stop	Stop
RT Channelized	-	None	-	None	-	None
Storage Length	-	-	150	-	0	0
Veh in Median Storage, #	0	-	-	0	2	-
Grade, %	0	-	-	0	0	-
Peak Hour Factor	90	90	90	90	90	90
Heavy Vehicles, %	2	2	2	2	2	2
Mvmt Flow	1902	28	44	1060	39	88

Major/Minor	Major1		Major2		Minor1	
Conflicting Flow All	0	0	1930	0	2535	965
Stage 1	-	-	-	-	1916	-
Stage 2	-	-	-	-	619	-
Critical Hdwy	-	-	4.14	-	6.84	6.94
Critical Hdwy Stg 1	-	-	-	-	5.84	-
Critical Hdwy Stg 2	-	-	-	-	5.84	-
Follow-up Hdwy	-	-	2.22	-	3.52	3.32
Pot Cap-1 Maneuver	-	-	301	-	~ 22	255
Stage 1	-	-	-	-	101	-
Stage 2	-	-	-	-	499	-
Platoon blocked, %	-	-		-		
Mov Cap-1 Maneuver	-	-	301	-	~ 19	255
Mov Cap-2 Maneuver	-	-	-	-	80	-
Stage 1	-	-	-	-	101	-
Stage 2	-	-	-	-	426	-

Approach	EB	WB	NB
HCM Control Delay, s	0	0.8	44.9
HCM LOS			E

Minor Lane/Major Mvmt	NBLn1	NBLn2	EBT	EBR	WBL	WBT
Capacity (veh/h)	80	255	-	-	301	-
HCM Lane V/C Ratio	0.486	0.344	-	-	0.148	-
HCM Control Delay (s)	86.7	26.4	-	-	19	-
HCM Lane LOS	F	D	-	-	C	-
HCM 95th %tile Q(veh)	2	1.5	-	-	0.5	-

Notes

~: Volume exceeds capacity $: Delay exceeds 300s +: Computation Not Defined *: All major volume in platoon

Movement	EBL	EBT	EBR	WBL	WBT	WBR	NBL	NBT	NBR	SBL	SBT	SBR
Lane Configurations												
Traffic Volume (veh/h)	45	1735	11	27	962	126	28	9	11	27	1	4
Future Volume (veh/h)	45	1735	11	27	962	126	28	9	11	27	1	4
Number	3	8	18	7	4	14	1	6	16	5	2	12
Initial Q (Qb), veh	0	0	0	0	0	0	0	0	0	0	0	0
Ped-Bike Adj(A_pbT)	1.00		1.00	1.00		1.00	1.00		1.00	1.00		1.00
Parking Bus, Adj	1.00	1.00	1.00	1.00	1.00	1.00	1.00	1.00	1.00	1.00	1.00	1.00
Adj Sat Flow, veh/h/ln	1863	1863	1900	1863	1863	1863	1900	1863	1900	1900	1863	1863
Adj Flow Rate, veh/h	49	1886	12	29	1046	137	30	10	12	29	1	4
Adj No. of Lanes	1	2	0	1	2	1	0	1	0	0	1	1
Peak Hour Factor	0.92	0.92	0.92	0.92	0.92	0.92	0.92	0.92	0.92	0.92	0.92	0.92
Percent Heavy Veh, %	2	2	2	2	2	2	2	2	2	2	2	2
Cap, veh/h	399	2489	16	217	2443	1093	167	39	30	257	7	136
Arrive On Green	0.69	0.69	0.69	0.69	0.69	0.69	0.09	0.09	0.09	0.09	0.09	0.09
Sat Flow, veh/h	472	3605	23	237	3539	1583	715	459	352	1461	78	1583
Grp Volume(v), veh/h	49	925	973	29	1046	137	52	0	0	30	0	4
Grp Sat Flow(s),veh/h/ln	472	1770	1859	237	1770	1583	1526	0	0	1539	0	1583
Q Serve(g_s), s	2.7	18.2	18.2	4.9	7.0	1.6	0.9	0.0	0.0	0.0	0.0	0.1
Cycle Q Clear(g_c), s	9.7	18.2	18.2	23.1	7.0	1.6	1.7	0.0	0.0	0.8	0.0	0.1
Prop In Lane	1.00		0.01	1.00		1.00	0.58		0.23	0.97		1.00
Lane Grp Cap(c), veh/h	399	1222	1283	217	2443	1093	237	0	0	264	0	136
V/C Ratio(X)	0.12	0.76	0.76	0.13	0.43	0.13	0.22	0.00	0.00	0.11	0.00	0.03
Avail Cap(c_a), veh/h	399	1222	1283	217	2444	1093	560	0	0	561	0	473
HCM Platoon Ratio	1.00	1.00	1.00	1.00	1.00	1.00	1.00	1.00	1.00	1.00	1.00	1.00
Upstream Filter(I)	1.00	1.00	1.00	1.00	1.00	1.00	1.00	0.00	0.00	1.00	0.00	1.00
Uniform Delay (d), s/veh	5.8	5.4	5.4	12.9	3.6	2.8	23.1	0.0	0.0	22.8	0.0	22.5
Incr Delay (d2), s/veh	0.1	2.8	2.7	0.3	0.1	0.1	0.5	0.0	0.0	0.2	0.0	0.1
Initial Q Delay(d3),s/veh	0.0	0.0	0.0	0.0	0.0	0.0	0.0	0.0	0.0	0.0	0.0	0.0
%ile BackOfQ(50%),veh/ln	0.4	9.4	9.9	0.3	3.4	0.7	0.8	0.0	0.0	0.4	0.0	0.1
LnGrp Delay(d),s/veh	5.9	8.1	8.1	13.2	3.8	2.9	23.6	0.0	0.0	23.0	0.0	22.5
LnGrp LOS	A	A	A	B	A	A	C			C		C
Approach Vol, veh/h		1947			1212			52			34	
Approach Delay, s/veh		8.0			3.9			23.6			22.9	
Approach LOS		A			A			C			C	

Timer	1	2	3	4	5	6	7	8
Assigned Phs		2		4		6		8
Phs Duration (G+Y+Rc), s		10.6		43.0		10.6		43.0
Change Period (Y+Rc), s		6.0		6.0		6.0		6.0
Max Green Setting (Gmax), s		16.0		37.0		16.0		37.0
Max Q Clear Time (g_c+I1), s		2.8		25.1		3.7		20.2
Green Ext Time (p_c), s		0.9		11.9		0.9		16.8

Intersection Summary	
HCM 2010 Ctrl Delay	6.9
HCM 2010 LOS	A

Movement	EBT	EBR	WBL	WBT	NBL	NBR
Lane Configurations						
Traffic Volume (veh/h)	1264	293	0	695	262	2
Future Volume (veh/h)	1264	293	0	695	262	2
Number	8	18	7	4	1	16
Initial Q (Qb), veh	0	0	0	0	0	0
Ped-Bike Adj(A_pbT)		1.00	1.00		1.00	1.00
Parking Bus, Adj	1.00	1.00	1.00	1.00	1.00	1.00
Adj Sat Flow, veh/h/ln	1863	1900	0	1863	1863	1900
Adj Flow Rate, veh/h	1331	308	0	732	278	0
Adj No. of Lanes	2	0	0	2	2	1
Peak Hour Factor	0.95	0.95	0.95	0.95	0.95	0.95
Percent Heavy Veh, %	2	2	0	2	2	0
Cap, veh/h	1816	413	0	2242	456	208
Arrive On Green	0.63	0.63	0.00	0.63	0.13	0.00
Sat Flow, veh/h	2959	651	0	3725	3548	1615
Grp Volume(v), veh/h	813	826	0	732	278	0
Grp Sat Flow(s),veh/h/ln	1770	1748	0	1770	1774	1615
Q Serve(g_s), s	15.7	16.6	0.0	4.8	3.7	0.0
Cycle Q Clear(g_c), s	15.7	16.6	0.0	4.8	3.7	0.0
Prop In Lane		0.37	0.00		1.00	1.00
Lane Grp Cap(c), veh/h	1121	1107	0	2242	456	208
V/C Ratio(X)	0.72	0.75	0.00	0.33	0.61	0.00
Avail Cap(c_a), veh/h	1123	1109	0	2245	1125	512
HCM Platoon Ratio	1.00	1.00	1.00	1.00	1.00	1.00
Upstream Filter(I)	1.00	1.00	0.00	1.00	1.00	0.00
Uniform Delay (d), s/veh	6.3	6.4	0.0	4.3	20.8	0.0
Incr Delay (d2), s/veh	2.4	2.8	0.0	0.1	1.3	0.0
Initial Q Delay(d3),s/veh	0.0	0.0	0.0	0.0	0.0	0.0
%ile BackOfQ(50%),veh/ln	8.2	8.7	0.0	2.4	1.9	0.0
LnGrp Delay(d),s/veh	8.6	9.2	0.0	4.4	22.1	0.0
LnGrp LOS	A	A		A	C	
Approach Vol, veh/h	1639			732	278	
Approach Delay, s/veh	8.9			4.4	22.1	
Approach LOS	A			A	C	

Timer	1	2	3	4	5	6	7	8
Assigned Phs				4		6		8
Phs Duration (G+Y+Rc), s				38.0		12.5		38.0
Change Period (Y+Rc), s				6.0		6.0		6.0
Max Green Setting (Gmax), s				32.0		16.0		32.0
Max Q Clear Time (g_c+I1), s				6.8		5.7		18.6
Green Ext Time (p_c), s				25.0		0.8		13.4

Intersection Summary	
HCM 2010 Ctrl Delay	9.0
HCM 2010 LOS	A

Notes

Movement	NBL	NBT	NBR	SBL	SBT	SBR	NEL	NET	NER	SWL	SWT	SWR
Lane Configurations												
Traffic Volume (veh/h)	0	1258	67	25	710	978	1415	1	0	5	1	11
Future Volume (veh/h)	0	1258	67	25	710	978	1415	1	0	5	1	11
Number	1	6	16	5	2	12	3	8	18	7	4	14
Initial Q (Qb), veh	0	0	0	0	0	0	0	0	0	0	0	0
Ped-Bike Adj(A_pbT)	1.00		1.00	1.00		1.00	1.00		1.00	1.00		1.00
Parking Bus, Adj	1.00	1.00	1.00	1.00	1.00	1.00	1.00	1.00	1.00	1.00	1.00	1.00
Adj Sat Flow, veh/h/ln	0	1863	1900	1863	1863	1863	1863	1863	0	1863	1863	1863
Adj Flow Rate, veh/h	0	1324	71	26	747	1029	1490	0	0	5	1	0
Adj No. of Lanes	0	2	0	1	2	1	2	1	0	1	1	1
Peak Hour Factor	0.95	0.95	0.95	0.95	0.95	0.95	0.95	0.95	0.95	0.95	0.95	0.95
Percent Heavy Veh, %	0	2	2	2	2	2	2	2	0	2	2	2
Cap, veh/h	0	1338	72	93	1621	1349	1399	734	0	11	11	10
Arrive On Green	0.00	0.39	0.39	0.02	0.46	0.46	0.39	0.00	0.00	0.01	0.01	0.00
Sat Flow, veh/h	0	3510	183	1774	3539	1583	3548	1863	0	1774	1863	1583
Grp Volume(v), veh/h	0	685	710	26	747	1029	1490	0	0	5	1	0
Grp Sat Flow(s),veh/h/ln	0	1770	1830	1774	1770	1583	1774	1863	0	1774	1863	1583
Q Serve(g_s), s	0.0	48.7	48.9	1.1	18.4	34.8	50.0	0.0	0.0	0.4	0.1	0.0
Cycle Q Clear(g_c), s	0.0	48.7	48.9	1.1	18.4	34.8	50.0	0.0	0.0	0.4	0.1	0.0
Prop In Lane	0.00		0.10	1.00		1.00	1.00		0.00	1.00		1.00
Lane Grp Cap(c), veh/h	0	693	717	93	1621	1349	1399	734	0	11	11	10
V/C Ratio(X)	0.00	0.99	0.99	0.28	0.46	0.76	1.07	0.00	0.00	0.47	0.09	0.00
Avail Cap(c_a), veh/h	0	693	717	185	1702	1386	1399	734	0	224	235	200
HCM Platoon Ratio	1.00	1.00	1.00	1.00	1.00	1.00	1.00	1.00	1.00	1.00	1.00	1.00
Upstream Filter(I)	0.00	1.00	1.00	1.00	1.00	1.00	1.00	0.00	0.00	1.00	1.00	0.00
Uniform Delay (d), s/veh	0.0	38.3	38.4	31.7	23.6	4.0	38.4	0.0	0.0	62.8	62.7	0.0
Incr Delay (d2), s/veh	0.0	31.0	31.2	1.6	0.2	2.5	43.6	0.0	0.0	28.8	3.4	0.0
Initial Q Delay(d3),s/veh	0.0	0.0	0.0	0.0	0.0	0.0	0.0	0.0	0.0	0.0	0.0	0.0
%ile BackOfQ(50%),veh/ln	0.0	29.7	30.9	0.6	9.0	36.7	32.7	0.0	0.0	0.3	0.0	0.0
LnGrp Delay(d),s/veh	0.0	69.3	69.6	33.3	23.8	6.5	82.0	0.0	0.0	91.6	66.1	0.0
LnGrp LOS		E	E	C	C	A	F			F	E	
Approach Vol, veh/h		1395			1802			1490			6	
Approach Delay, s/veh		69.4			14.0			82.0			87.3	
Approach LOS		E			B			F			F	

Timer	1	2	3	4	5	6	7	8
Assigned Phs		2		4	5	6		8
Phs Duration (G+Y+Rc), s		64.1		6.8	8.4	55.7		56.0
Change Period (Y+Rc), s		6.0		6.0	6.0	6.0		6.0
Max Green Setting (Gmax), s		61.0		16.0	9.0	46.0		50.0
Max Q Clear Time (g_c+I1), s		36.8		2.4	3.1	50.9		52.0
Green Ext Time (p_c), s		21.3		0.0	0.0	0.0		0.0

Intersection Summary	
HCM 2010 Ctrl Delay	52.2
HCM 2010 LOS	D

Notes

Movement	EBL	EBR	NBL	NBT	SBT	SBR
Lane Configurations						
Traffic Volume (veh/h)	0	321	288	1332	661	15
Future Volume (veh/h)	0	321	288	1332	661	15
Number	3	18	1	6	2	12
Initial Q (Qb), veh	0	0	0	0	0	0
Ped-Bike Adj(A_pbT)	1.00	1.00	1.00			1.00
Parking Bus, Adj	1.00	1.00	1.00	1.00	1.00	1.00
Adj Sat Flow, veh/h/ln	0	1863	1863	1863	1863	1863
Adj Flow Rate, veh/h	0	338	303	1402	696	0
Adj No. of Lanes	0	1	1	2	2	1
Peak Hour Factor	0.95	0.95	0.95	0.95	0.95	0.95
Percent Heavy Veh, %	0	2	2	2	2	2
Cap, veh/h	0	0	737	2952	1946	871
Arrive On Green	0.00	0.00	0.12	0.83	0.55	0.00
Sat Flow, veh/h	0		1774	3632	3632	1583
Grp Volume(v), veh/h	0.0		303	1402	696	0
Grp Sat Flow(s),veh/h/ln			1774	1770	1770	1583
Q Serve(g_s), s			2.1	3.9	4.0	0.0
Cycle Q Clear(g_c), s			2.1	3.9	4.0	0.0
Prop In Lane			1.00			1.00
Lane Grp Cap(c), veh/h			737	2952	1946	871
V/C Ratio(X)			0.41	0.47	0.36	0.00
Avail Cap(c_a), veh/h			968	3130	1946	871
HCM Platoon Ratio			1.00	1.00	1.00	1.00
Upstream Filter(I)			1.00	1.00	1.00	0.00
Uniform Delay (d), s/veh			2.5	0.8	4.6	0.0
Incr Delay (d2), s/veh			0.4	0.1	0.1	0.0
Initial Q Delay(d3),s/veh			0.0	0.0	0.0	0.0
%ile BackOfQ(50%),veh/ln			0.9	1.8	2.0	0.0
LnGrp Delay(d),s/veh			2.9	0.9	4.7	0.0
LnGrp LOS			A	A	A	
Approach Vol, veh/h				1705	696	
Approach Delay, s/veh				1.3	4.7	
Approach LOS				A	A	

Timer	1	2	3	4	5	6	7	8
Assigned Phs	1	2				6		
Phs Duration (G+Y+Rc), s	10.3	25.9				36.2		
Change Period (Y+Rc), s	6.0	6.0				6.0		
Max Green Setting (Gmax), s	9.0	17.0				32.0		
Max Q Clear Time (g_c+I1), s	4.1	6.0				5.9		
Green Ext Time (p_c), s	0.4	10.9				24.3		

Intersection Summary	
HCM 2010 Ctrl Delay	2.3
HCM 2010 LOS	A

Intersection	
Int Delay, s/veh	2.2

Movement	EBT	EBR	WBL	WBT	NBL	NBR
Traffic Vol, veh/h	989	56	71	1558	57	67
Future Vol, veh/h	989	56	71	1558	57	67
Conflicting Peds, #/hr	0	0	0	0	0	0
Sign Control	Free	Free	Free	Free	Stop	Stop
RT Channelized	-	None	-	None	-	None
Storage Length	-	-	100	-	0	-
Veh in Median Storage, #	0	-	-	0	2	-
Grade, %	0	-	-	0	0	-
Peak Hour Factor	90	90	90	90	90	90
Heavy Vehicles, %	2	2	2	2	2	2
Mvmt Flow	1099	62	79	1731	63	74

Major/Minor	Major1		Major2		Minor1	
Conflicting Flow All	0	0	1161	0	2153	581
Stage 1	-	-	-	-	1130	-
Stage 2	-	-	-	-	1023	-
Critical Hdwy	-	-	4.14	-	6.84	6.94
Critical Hdwy Stg 1	-	-	-	-	5.84	-
Critical Hdwy Stg 2	-	-	-	-	5.84	-
Follow-up Hdwy	-	-	2.22	-	3.52	3.32
Pot Cap-1 Maneuver	-	-	597	-	~ 41	457
Stage 1	-	-	-	-	270	-
Stage 2	-	-	-	-	308	-
Platoon blocked, %	-	-		-		
Mov Cap-1 Maneuver	-	-	597	-	~ 36	457
Mov Cap-2 Maneuver	-	-	-	-	139	-
Stage 1	-	-	-	-	270	-
Stage 2	-	-	-	-	267	-

Approach	EB	WB	NB
HCM Control Delay, s	0	0.5	44.2
HCM LOS			E

Minor Lane/Major Mvmt	NBLn1	EBT	EBR	WBL	WBT
Capacity (veh/h)	223	-	-	597	-
HCM Lane V/C Ratio	0.618	-	-	0.132	-
HCM Control Delay (s)	44.2	-	-	11.9	-
HCM Lane LOS	E	-	-	B	-
HCM 95th %tile Q(veh)	3.6	-	-	0.5	-

Notes

~: Volume exceeds capacity $: Delay exceeds 300s +: Computation Not Defined *: All major volume in platoon

Intersection	
Int Delay, s/veh	1.2

Movement	WBL	WBR	NBT	NBR	SBL	SBT
Traffic Vol, veh/h	0	20	104	0	17	109
Future Vol, veh/h	0	20	104	0	17	109
Conflicting Peds, #/hr	0	0	0	0	0	0
Sign Control	Stop	Stop	Free	Free	Free	Free
RT Channelized	-	None	-	None	-	None
Storage Length	0	-	-	-	-	-
Veh in Median Storage, #	0	-	0	-	-	0
Grade, %	0	-	0	-	-	0
Peak Hour Factor	90	90	90	90	90	90
Heavy Vehicles, %	2	2	2	2	2	2
Mvmt Flow	0	22	116	0	19	121

Major/Minor	Minor1		Major1		Major2	
Conflicting Flow All	275	116	0	0	116	0
Stage 1	116	-	-	-	-	-
Stage 2	159	-	-	-	-	-
Critical Hdwy	6.42	6.22	-	-	4.12	-
Critical Hdwy Stg 1	5.42	-	-	-	-	-
Critical Hdwy Stg 2	5.42	-	-	-	-	-
Follow-up Hdwy	3.518	3.318	-	-	2.218	-
Pot Cap-1 Maneuver	715	936	-	-	1473	-
Stage 1	909	-	-	-	-	-
Stage 2	870	-	-	-	-	-
Platoon blocked, %			-	-		-
Mov Cap-1 Maneuver	705	936	-	-	1473	-
Mov Cap-2 Maneuver	705	-	-	-	-	-
Stage 1	909	-	-	-	-	-
Stage 2	858	-	-	-	-	-

Approach	WB	NB	SB
HCM Control Delay, s	8.9	0	1
HCM LOS	A		

Minor Lane/Major Mvmt	NBT	NBR	WBLn1	SBL	SBT
Capacity (veh/h)	-	-	936	1473	-
HCM Lane V/C Ratio	-	-	0.024	0.013	-
HCM Control Delay (s)	-	-	8.9	7.5	0
HCM Lane LOS	-	-	A	A	A
HCM 95th %tile Q(veh)	-	-	0.1	0	-

Intersection	
Int Delay, s/veh	1.4

Movement	EBT	EBR	WBL	WBT	NBL	NBR
Traffic Vol, veh/h	1042	47	109	1651	35	59
Future Vol, veh/h	1042	47	109	1651	35	59
Conflicting Peds, #/hr	0	0	0	0	0	0
Sign Control	Free	Free	Free	Free	Stop	Stop
RT Channelized	-	None	-	None	-	None
Storage Length	-	-	150	-	0	0
Veh in Median Storage, #	0	-	-	0	2	-
Grade, %	0	-	-	0	0	-
Peak Hour Factor	90	90	90	90	90	90
Heavy Vehicles, %	2	2	2	2	2	2
Mvmt Flow	1158	52	121	1834	39	66

Major/Minor	Major1		Major2		Minor1	
Conflicting Flow All	0	0	1210	0	2343	605
Stage 1	-	-	-	-	1184	-
Stage 2	-	-	-	-	1159	-
Critical Hdwy	-	-	4.14	-	6.84	6.94
Critical Hdwy Stg 1	-	-	-	-	5.84	-
Critical Hdwy Stg 2	-	-	-	-	5.84	-
Follow-up Hdwy	-	-	2.22	-	3.52	3.32
Pot Cap-1 Maneuver	-	-	572	-	~ 30	441
Stage 1	-	-	-	-	253	-
Stage 2	-	-	-	-	261	-
Platoon blocked, %	-	-		-		
Mov Cap-1 Maneuver	-	-	572	-	~ 24	441
Mov Cap-2 Maneuver	-	-	-	-	114	-
Stage 1	-	-	-	-	253	-
Stage 2	-	-	-	-	206	-

Approach	EB	WB	NB
HCM Control Delay, s	0	0.8	28.6
HCM LOS			D

Minor Lane/Major Mvmt	NBLn1	NBLn2	EBT	EBR	WBL	WBT
Capacity (veh/h)	114	441	-	-	572	-
HCM Lane V/C Ratio	0.341	0.149	-	-	0.212	-
HCM Control Delay (s)	52.1	14.6	-	-	13	-
HCM Lane LOS	F	B	-	-	B	-
HCM 95th %tile Q(veh)	1.4	0.5	-	-	0.8	-

Notes

~: Volume exceeds capacity $: Delay exceeds 300s +: Computation Not Defined *: All major volume in platoon

Movement	EBL	EBT	EBR	WBL	WBT	WBR	NBL	NBT	NBR	SBL	SBT	SBR
Lane Configurations												
Traffic Volume (veh/h)	31	1037	33	26	1686	44	54	3	4	209	0	21
Future Volume (veh/h)	31	1037	33	26	1686	44	54	3	4	209	0	21
Number	3	8	18	7	4	14	1	6	16	5	2	12
Initial Q (Qb), veh	0	0	0	0	0	0	0	0	0	0	0	0
Ped-Bike Adj(A_pbT)	1.00		1.00	1.00		1.00	1.00		1.00	1.00		1.00
Parking Bus, Adj	1.00	1.00	1.00	1.00	1.00	1.00	1.00	1.00	1.00	1.00	1.00	1.00
Adj Sat Flow, veh/h/ln	1863	1863	1900	1863	1863	1863	1900	1863	1900	1900	1863	1863
Adj Flow Rate, veh/h	34	1127	36	28	1833	48	59	3	4	227	0	23
Adj No. of Lanes	1	2	0	1	2	1	0	1	0	0	1	1
Peak Hour Factor	0.92	0.92	0.92	0.92	0.92	0.92	0.92	0.92	0.92	0.92	0.92	0.92
Percent Heavy Veh, %	2	2	2	2	2	2	2	2	2	2	2	2
Cap, veh/h	148	1964	63	296	1986	888	255	14	10	490	0	362
Arrive On Green	0.56	0.56	0.56	0.56	0.56	0.56	0.23	0.23	0.23	0.23	0.00	0.23
Sat Flow, veh/h	241	3501	112	481	3539	1583	592	62	42	1590	0	1583
Grp Volume(v), veh/h	34	570	593	28	1833	48	66	0	0	227	0	23
Grp Sat Flow(s),veh/h/ln	241	1770	1843	481	1770	1583	695	0	0	1590	0	1583
Q Serve(g_s), s	5.1	11.9	11.9	2.3	26.9	0.8	2.2	0.0	0.0	0.0	0.0	0.6
Cycle Q Clear(g_c), s	32.0	11.9	11.9	14.2	26.9	0.8	9.1	0.0	0.0	6.9	0.0	0.6
Prop In Lane	1.00		0.06	1.00		1.00	0.89		0.06	1.00		1.00
Lane Grp Cap(c), veh/h	148	993	1034	296	1986	888	279	0	0	490	0	362
V/C Ratio(X)	0.23	0.57	0.57	0.09	0.92	0.05	0.24	0.00	0.00	0.46	0.00	0.06
Avail Cap(c_a), veh/h	148	993	1034	296	1986	888	352	0	0	562	0	444
HCM Platoon Ratio	1.00	1.00	1.00	1.00	1.00	1.00	1.00	1.00	1.00	1.00	1.00	1.00
Upstream Filter(I)	1.00	1.00	1.00	1.00	1.00	1.00	1.00	0.00	0.00	1.00	0.00	1.00
Uniform Delay (d), s/veh	26.9	8.1	8.1	12.7	11.4	5.7	22.8	0.0	0.0	19.6	0.0	17.2
Incr Delay (d2), s/veh	0.8	0.8	0.8	0.1	7.8	0.0	0.4	0.0	0.0	0.7	0.0	0.1
Initial Q Delay(d3),s/veh	0.0	0.0	0.0	0.0	0.0	0.0	0.0	0.0	0.0	0.0	0.0	0.0
%ile BackOfQ(50%),veh/ln	0.6	5.9	6.2	0.3	14.9	0.3	1.0	0.0	0.0	3.2	0.0	0.3
LnGrp Delay(d),s/veh	27.7	8.9	8.9	12.8	19.2	5.7	23.2	0.0	0.0	20.3	0.0	17.3
LnGrp LOS	C	A	A	B	B	A	C			C		B
Approach Vol, veh/h		1197			1909			66			250	
Approach Delay, s/veh		9.4			18.8			23.2			20.0	
Approach LOS		A			B			C			C	

Timer	1	2	3	4	5	6	7	8
Assigned Phs		2		4		6		8
Phs Duration (G+Y+Rc), s		19.0		38.0		19.0		38.0
Change Period (Y+Rc), s		6.0		6.0		6.0		6.0
Max Green Setting (Gmax), s		16.0		32.0		16.0		32.0
Max Q Clear Time (g_c+I1), s		8.9		28.9		11.1		34.0
Green Ext Time (p_c), s		2.7		3.1		1.9		0.0

Intersection Summary	
HCM 2010 Ctrl Delay	15.7
HCM 2010 LOS	B

Movement	EBT	EBR	WBL	WBT	NBL	NBR
Lane Configurations						
Traffic Volume (veh/h)	941	317	0	1432	465	8
Future Volume (veh/h)	941	317	0	1432	465	8
Number	8	18	7	4	1	16
Initial Q (Qb), veh	0	0	0	0	0	0
Ped-Bike Adj(A_pbT)		1.00	1.00		1.00	1.00
Parking Bus, Adj	1.00	1.00	1.00	1.00	1.00	1.00
Adj Sat Flow, veh/h/ln	1863	1900	0	1863	1863	1900
Adj Flow Rate, veh/h	991	334	0	1507	496	0
Adj No. of Lanes	2	0	0	2	2	1
Peak Hour Factor	0.95	0.95	0.95	0.95	0.95	0.95
Percent Heavy Veh, %	2	2	0	2	2	0
Cap, veh/h	1534	513	0	2084	676	308
Arrive On Green	0.59	0.59	0.00	0.59	0.19	0.00
Sat Flow, veh/h	2700	872	0	3725	3548	1615
Grp Volume(v), veh/h	670	655	0	1507	496	0
Grp Sat Flow(s),veh/h/ln	1770	1709	0	1770	1774	1615
Q Serve(g_s), s	13.6	13.9	0.0	16.6	7.1	0.0
Cycle Q Clear(g_c), s	13.6	13.9	0.0	16.6	7.1	0.0
Prop In Lane		0.51	0.00		1.00	1.00
Lane Grp Cap(c), veh/h	1042	1006	0	2084	676	308
V/C Ratio(X)	0.64	0.65	0.00	0.72	0.73	0.00
Avail Cap(c_a), veh/h	1042	1006	0	2084	1045	476
HCM Platoon Ratio	1.00	1.00	1.00	1.00	1.00	1.00
Upstream Filter(I)	1.00	1.00	0.00	1.00	1.00	0.00
Uniform Delay (d), s/veh	7.4	7.4	0.0	8.0	20.7	0.0
Incr Delay (d2), s/veh	1.4	1.5	0.0	1.3	1.6	0.0
Initial Q Delay(d3),s/veh	0.0	0.0	0.0	0.0	0.0	0.0
%ile BackOfQ(50%),veh/ln	6.9	6.8	0.0	8.3	3.6	0.0
LnGrp Delay(d),s/veh	8.8	8.9	0.0	9.3	22.3	0.0
LnGrp LOS	A	A		A	C	
Approach Vol, veh/h	1325			1507	496	
Approach Delay, s/veh	8.9			9.3	22.3	
Approach LOS	A			A	C	

Timer	1	2	3	4	5	6	7	8
Assigned Phs				4		6		8
Phs Duration (G+Y+Rc), s				38.0		16.3		38.0
Change Period (Y+Rc), s				6.0		6.0		6.0
Max Green Setting (Gmax), s				32.0		16.0		32.0
Max Q Clear Time (g_c+I1), s				18.6		9.1		15.9
Green Ext Time (p_c), s				13.4		1.2		16.1

Intersection Summary	
HCM 2010 Ctrl Delay	11.0
HCM 2010 LOS	B

Notes

Movement	NBL	NBT	NBR	SBL	SBT	SBR	NEL	NET	NER	SWL	SWT	SWR
Lane Configurations												
Traffic Volume (veh/h)	0	852	3	34	2043	1573	1116	16	0	21	8	14
Future Volume (veh/h)	0	852	3	34	2043	1573	1116	16	0	21	8	14
Number	1	6	16	5	2	12	3	8	18	7	4	14
Initial Q (Qb), veh	0	0	0	0	0	0	0	0	0	0	0	0
Ped-Bike Adj(A_pbT)	1.00		1.00	1.00		1.00	1.00		1.00	1.00		1.00
Parking Bus, Adj	1.00	1.00	1.00	1.00	1.00	1.00	1.00	1.00	1.00	1.00	1.00	1.00
Adj Sat Flow, veh/h/ln	0	1863	1900	1863	1863	1863	1863	1863	0	1863	1863	1863
Adj Flow Rate, veh/h	0	897	3	36	2151	1656	1187	0	0	22	8	0
Adj No. of Lanes	0	2	0	1	2	1	2	1	0	1	1	1
Peak Hour Factor	0.95	0.95	0.95	0.95	0.95	0.95	0.95	0.95	0.95	0.95	0.95	0.95
Percent Heavy Veh, %	0	2	2	2	2	2	2	2	0	2	2	2
Cap, veh/h	0	1706	6	277	1909	1335	1078	566	0	36	38	32
Arrive On Green	0.00	0.47	0.47	0.02	0.54	0.54	0.30	0.00	0.00	0.02	0.02	0.00
Sat Flow, veh/h	0	3711	12	1774	3539	1583	3548	1863	0	1774	1863	1583
Grp Volume(v), veh/h	0	439	461	36	2151	1656	1187	0	0	22	8	0
Grp Sat Flow(s),veh/h/ln	0	1770	1861	1774	1770	1583	1774	1863	0	1774	1863	1583
Q Serve(g_s), s	0.0	22.9	22.9	1.3	71.0	71.0	40.0	0.0	0.0	1.6	0.6	0.0
Cycle Q Clear(g_c), s	0.0	22.9	22.9	1.3	71.0	71.0	40.0	0.0	0.0	1.6	0.6	0.0
Prop In Lane	0.00		0.01	1.00		1.00	1.00		0.00	1.00		1.00
Lane Grp Cap(c), veh/h	0	834	877	277	1909	1335	1078	566	0	36	38	32
V/C Ratio(X)	0.00	0.53	0.53	0.13	1.13	1.24	1.10	0.00	0.00	0.61	0.21	0.00
Avail Cap(c_a), veh/h	0	834	877	359	1909	1335	1078	566	0	216	226	192
HCM Platoon Ratio	1.00	1.00	1.00	1.00	1.00	1.00	1.00	1.00	1.00	1.00	1.00	1.00
Upstream Filter(I)	0.00	1.00	1.00	1.00	1.00	1.00	1.00	0.00	0.00	1.00	1.00	0.00
Uniform Delay (d), s/veh	0.0	24.5	24.5	18.7	30.3	7.2	45.8	0.0	0.0	64.0	63.5	0.0
Incr Delay (d2), s/veh	0.0	0.6	0.6	0.2	64.6	114.8	59.5	0.0	0.0	15.7	2.8	0.0
Initial Q Delay(d3),s/veh	0.0	0.0	0.0	0.0	0.0	0.0	0.0	0.0	0.0	0.0	0.0	0.0
%ile BackOfQ(50%),veh/ln	0.0	11.4	11.9	0.7	51.6	90.8	28.4	0.0	0.0	1.0	0.3	0.0
LnGrp Delay(d),s/veh	0.0	25.1	25.0	18.9	94.9	122.0	105.3	0.0	0.0	79.7	66.2	0.0
LnGrp LOS		C	C	B	F	F	F			E	E	
Approach Vol, veh/h		900			3843			1187			30	
Approach Delay, s/veh		25.1			105.9			105.3			76.1	
Approach LOS		C			F			F			E	

Timer	1	2	3	4	5	6	7	8
Assigned Phs		2		4	5	6		8
Phs Duration (G+Y+Rc), s		77.0		8.7	8.9	68.1		46.0
Change Period (Y+Rc), s		6.0		6.0	6.0	6.0		6.0
Max Green Setting (Gmax), s		71.0		16.0	9.0	56.0		40.0
Max Q Clear Time (g_c+I1), s		73.0		3.6	3.3	24.9		42.0
Green Ext Time (p_c), s		0.0		0.1	0.0	31.0		0.0

Intersection Summary	
HCM 2010 Ctrl Delay	93.4
HCM 2010 LOS	F

Notes

Movement	EBL	EBR	NBL	NBT	SBT	SBR
Lane Configurations						
Traffic Volume (veh/h)	0	410	570	844	1436	22
Future Volume (veh/h)	0	410	570	844	1436	22
Number	3	18	1	6	2	12
Initial Q (Qb), veh	0	0	0	0	0	0
Ped-Bike Adj(A_pbT)	1.00	1.00	1.00			1.00
Parking Bus, Adj	1.00	1.00	1.00	1.00	1.00	1.00
Adj Sat Flow, veh/h/ln	0	1863	1863	1863	1863	1863
Adj Flow Rate, veh/h	0	432	600	888	1512	0
Adj No. of Lanes	0	1	1	2	2	1
Peak Hour Factor	0.95	0.95	0.95	0.95	0.95	0.95
Percent Heavy Veh, %	0	2	2	2	2	2
Cap, veh/h	0	0	650	3305	2149	961
Arrive On Green	0.00	0.00	0.26	0.93	0.61	0.00
Sat Flow, veh/h	0		1774	3632	3632	1583
Grp Volume(v), veh/h	0.0		600	888	1512	0
Grp Sat Flow(s),veh/h/ln			1774	1770	1770	1583
Q Serve(g_s), s			19.8	2.0	26.5	0.0
Cycle Q Clear(g_c), s			19.8	2.0	26.5	0.0
Prop In Lane			1.00			1.00
Lane Grp Cap(c), veh/h			650	3305	2149	961
V/C Ratio(X)			0.92	0.27	0.70	0.00
Avail Cap(c_a), veh/h			853	3594	2149	961
HCM Platoon Ratio			1.00	1.00	1.00	1.00
Upstream Filter(I)			1.00	1.00	1.00	0.00
Uniform Delay (d), s/veh			23.3	0.3	12.2	0.0
Incr Delay (d2), s/veh			13.0	0.0	1.1	0.0
Initial Q Delay(d3),s/veh			0.0	0.0	0.0	0.0
%ile BackOfQ(50%),veh/ln			16.7	0.9	13.1	0.0
LnGrp Delay(d),s/veh			36.3	0.3	13.3	0.0
LnGrp LOS			D	A	B	
Approach Vol, veh/h				1488	1512	
Approach Delay, s/veh				14.8	13.3	
Approach LOS				B	B	

Timer	1	2	3	4	5	6	7	8
Assigned Phs	1	2				6		
Phs Duration (G+Y+Rc), s	29.6	61.0				90.6		
Change Period (Y+Rc), s	6.0	6.0				6.0		
Max Green Setting (Gmax), s	24.0	52.0				92.0		
Max Q Clear Time (g_c+I1), s	21.8	28.5				4.0		
Green Ext Time (p_c), s	1.8	23.3				80.6		

Intersection Summary	
HCM 2010 Ctrl Delay	14.0
HCM 2010 LOS	B

Appendix F

Analysis Worksheets (2019 Build Conditions)

Intersection	
Int Delay, s/veh	13

Movement	EBT	EBR	WBL	WBT	NBL	NBR
Traffic Vol, veh/h	1756	32	34	729	54	105
Future Vol, veh/h	1756	32	34	729	54	105
Conflicting Peds, #/hr	0	0	0	0	0	0
Sign Control	Free	Free	Free	Free	Stop	Stop
RT Channelized	-	None	-	None	-	None
Storage Length	-	-	100	-	0	-
Veh in Median Storage, #	0	-	-	0	2	-
Grade, %	0	-	-	0	0	-
Peak Hour Factor	90	90	90	90	90	90
Heavy Vehicles, %	2	2	2	2	2	2
Mvmt Flow	1951	36	38	810	60	117

Major/Minor	Major1		Major2		Minor1	
Conflicting Flow All	0	0	1987	0	2450	993
Stage 1	-	-	-	-	1969	-
Stage 2	-	-	-	-	481	-
Critical Hdwy	-	-	4.14	-	6.84	6.94
Critical Hdwy Stg 1	-	-	-	-	5.84	-
Critical Hdwy Stg 2	-	-	-	-	5.84	-
Follow-up Hdwy	-	-	2.22	-	3.52	3.32
Pot Cap-1 Maneuver	-	-	286	-	~ 26	244
Stage 1	-	-	-	-	95	-
Stage 2	-	-	-	-	588	-
Platoon blocked, %	-	-		-		
Mov Cap-1 Maneuver	-	-	286	-	~ 23	244
Mov Cap-2 Maneuver	-	-	-	-	78	-
Stage 1	-	-	-	-	95	-
Stage 2	-	-	-	-	510	-

Approach	EB	WB	NB
HCM Control Delay, s	0	0.9	216.5
HCM LOS			F

Minor Lane/Major Mvmt	NBLn1	EBT	EBR	WBL	WBT
Capacity (veh/h)	142	-	-	286	-
HCM Lane V/C Ratio	1.244	-	-	0.132	-
HCM Control Delay (s)	216.5	-	-	19.5	-
HCM Lane LOS	F	-	-	C	-
HCM 95th %tile Q(veh)	10.6	-	-	0.5	-

Notes

~: Volume exceeds capacity $: Delay exceeds 300s +: Computation Not Defined *: All major volume in platoon

Intersection	
Int Delay, s/veh	2.4

Movement	WBL	WBR	NBT	NBR	SBL	SBT
Traffic Vol, veh/h	0	56	103	0	5	61
Future Vol, veh/h	0	56	103	0	5	61
Conflicting Peds, #/hr	0	0	0	0	0	0
Sign Control	Stop	Stop	Free	Free	Free	Free
RT Channelized	-	None	-	None	-	None
Storage Length	0	-	-	-	-	-
Veh in Median Storage, #	0	-	0	-	-	0
Grade, %	0	-	0	-	-	0
Peak Hour Factor	90	90	90	90	90	90
Heavy Vehicles, %	2	2	2	2	2	2
Mvmt Flow	0	62	114	0	6	68

Major/Minor	Minor1		Major1		Major2	
Conflicting Flow All	193	114	0	0	114	0
Stage 1	114	-	-	-	-	-
Stage 2	79	-	-	-	-	-
Critical Hdwy	6.42	6.22	-	-	4.12	-
Critical Hdwy Stg 1	5.42	-	-	-	-	-
Critical Hdwy Stg 2	5.42	-	-	-	-	-
Follow-up Hdwy	3.518	3.318	-	-	2.218	-
Pot Cap-1 Maneuver	796	939	-	-	1475	-
Stage 1	911	-	-	-	-	-
Stage 2	944	-	-	-	-	-
Platoon blocked, %			-	-		-
Mov Cap-1 Maneuver	793	939	-	-	1475	-
Mov Cap-2 Maneuver	793	-	-	-	-	-
Stage 1	911	-	-	-	-	-
Stage 2	940	-	-	-	-	-

Approach	WB	NB	SB
HCM Control Delay, s	9.1	0	0.6
HCM LOS	A		

Minor Lane/Major Mvmt	NBT	NBR	WBLn1	SBL	SBT
Capacity (veh/h)	-	-	939	1475	-
HCM Lane V/C Ratio	-	-	0.066	0.004	-
HCM Control Delay (s)	-	-	9.1	7.5	0
HCM Lane LOS	-	-	A	A	A
HCM 95th %tile Q(veh)	-	-	0.2	0	-

Intersection	
Int Delay, s/veh	5.4

Movement	EBT	EBR	WBL	WBT	NBL	NBR
Traffic Vol, veh/h	1709	38	73	952	47	170
Future Vol, veh/h	1709	38	73	952	47	170
Conflicting Peds, #/hr	0	0	0	0	0	0
Sign Control	Free	Free	Free	Free	Stop	Stop
RT Channelized	-	None	-	None	-	None
Storage Length	-	-	150	-	0	0
Veh in Median Storage, #	0	-	-	0	2	-
Grade, %	0	-	-	0	0	-
Peak Hour Factor	90	90	90	90	90	90
Heavy Vehicles, %	2	2	2	2	2	2
Mvmt Flow	1899	42	81	1058	52	189

Major/Minor	Major1		Major2		Minor1	
Conflicting Flow All	0	0	1941	0	2611	971
Stage 1	-	-	-	-	1920	-
Stage 2	-	-	-	-	691	-
Critical Hdwy	-	-	4.14	-	6.84	6.94
Critical Hdwy Stg 1	-	-	-	-	5.84	-
Critical Hdwy Stg 2	-	-	-	-	5.84	-
Follow-up Hdwy	-	-	2.22	-	3.52	3.32
Pot Cap-1 Maneuver	-	-	298	-	~ 20	252
Stage 1	-	-	-	-	101	-
Stage 2	-	-	-	-	459	-
Platoon blocked, %	-	-		-		
Mov Cap-1 Maneuver	-	-	298	-	~ 15	252
Mov Cap-2 Maneuver	-	-	-	-	76	-
Stage 1	-	-	-	-	101	-
Stage 2	-	-	-	-	334	-

Approach	EB	WB	NB
HCM Control Delay, s	0	1.5	67.4
HCM LOS			F

Minor Lane/Major Mvmt	NBLn1	NBLn2	EBT	EBR	WBL	WBT
Capacity (veh/h)	76	252	-	-	298	-
HCM Lane V/C Ratio	0.687	0.75	-	-	0.272	-
HCM Control Delay (s)	122	52.3	-	-	21.5	-
HCM Lane LOS	F	F	-	-	C	-
HCM 95th %tile Q(veh)	3.2	5.3	-	-	1.1	-

Notes

~: Volume exceeds capacity $: Delay exceeds 300s +: Computation Not Defined *: All major volume in platoon

Movement	EBL	EBT	EBR	WBL	WBT	WBR	NBL	NBT	NBR	SBL	SBT	SBR
Lane Configurations												
Traffic Volume (veh/h)	45	1823	11	27	993	126	28	9	11	27	1	4
Future Volume (veh/h)	45	1823	11	27	993	126	28	9	11	27	1	4
Number	3	8	18	7	4	14	1	6	16	5	2	12
Initial Q (Qb), veh	0	0	0	0	0	0	0	0	0	0	0	0
Ped-Bike Adj(A_pbT)	1.00		1.00	1.00		1.00	1.00		1.00	1.00		1.00
Parking Bus, Adj	1.00	1.00	1.00	1.00	1.00	1.00	1.00	1.00	1.00	1.00	1.00	1.00
Adj Sat Flow, veh/h/ln	1863	1863	1900	1863	1863	1863	1900	1863	1900	1900	1863	1863
Adj Flow Rate, veh/h	49	1982	12	29	1079	137	30	10	12	29	1	4
Adj No. of Lanes	1	2	0	1	2	1	0	1	0	0	1	1
Peak Hour Factor	0.92	0.92	0.92	0.92	0.92	0.92	0.92	0.92	0.92	0.92	0.92	0.92
Percent Heavy Veh, %	2	2	2	2	2	2	2	2	2	2	2	2
Cap, veh/h	392	2576	16	201	2528	1131	154	37	28	241	6	129
Arrive On Green	0.71	0.71	0.71	0.71	0.71	0.71	0.08	0.08	0.08	0.08	0.08	0.08
Sat Flow, veh/h	457	3607	22	216	3539	1583	706	457	349	1473	78	1583
Grp Volume(v), veh/h	49	971	1023	29	1079	137	52	0	0	30	0	4
Grp Sat Flow(s),veh/h/ln	457	1770	1859	216	1770	1583	1512	0	0	1550	0	1583
Q Serve(g_s), s	2.9	20.4	20.5	5.8	7.4	1.6	1.0	0.0	0.0	0.0	0.0	0.1
Cycle Q Clear(g_c), s	10.3	20.4	20.5	26.3	7.4	1.6	1.9	0.0	0.0	0.9	0.0	0.1
Prop In Lane	1.00		0.01	1.00		1.00	0.58		0.23	0.97		1.00
Lane Grp Cap(c), veh/h	392	1264	1328	201	2528	1131	220	0	0	247	0	129
V/C Ratio(X)	0.13	0.77	0.77	0.14	0.43	0.12	0.24	0.00	0.00	0.12	0.00	0.03
Avail Cap(c_a), veh/h	392	1264	1328	201	2529	1131	509	0	0	513	0	431
HCM Platoon Ratio	1.00	1.00	1.00	1.00	1.00	1.00	1.00	1.00	1.00	1.00	1.00	1.00
Upstream Filter(I)	1.00	1.00	1.00	1.00	1.00	1.00	1.00	0.00	0.00	1.00	0.00	1.00
Uniform Delay (d), s/veh	5.6	5.3	5.3	13.7	3.5	2.6	25.6	0.0	0.0	25.2	0.0	24.9
Incr Delay (d2), s/veh	0.1	2.9	2.8	0.3	0.1	0.0	0.5	0.0	0.0	0.2	0.0	0.1
Initial Q Delay(d3),s/veh	0.0	0.0	0.0	0.0	0.0	0.0	0.0	0.0	0.0	0.0	0.0	0.0
%ile BackOfQ(50%),veh/ln	0.4	10.7	11.3	0.4	3.5	0.7	0.8	0.0	0.0	0.5	0.0	0.1
LnGrp Delay(d),s/veh	5.7	8.3	8.2	14.0	3.6	2.7	26.2	0.0	0.0	25.4	0.0	25.0
LnGrp LOS	A	A	A	B	A	A	C			C		C
Approach Vol, veh/h		2043			1245			52			34	
Approach Delay, s/veh		8.1			3.7			26.2			25.4	
Approach LOS		A			A			C			C	

Timer	1	2	3	4	5	6	7	8
Assigned Phs		2		4		6		8
Phs Duration (G+Y+Rc), s		10.8		48.0		10.8		48.0
Change Period (Y+Rc), s		6.0		6.0		6.0		6.0
Max Green Setting (Gmax), s		16.0		42.0		16.0		42.0
Max Q Clear Time (g_c+I1), s		2.9		28.3		3.9		22.5
Green Ext Time (p_c), s		0.9		13.6		0.9		19.4

Intersection Summary	
HCM 2010 Ctrl Delay	7.0
HCM 2010 LOS	A

Movement	EBT	EBR	WBL	WBT	NBL	NBR
Lane Configurations						
Traffic Volume (veh/h)	1323	322	0	716	272	2
Future Volume (veh/h)	1323	322	0	716	272	2
Number	8	18	7	4	1	16
Initial Q (Qb), veh	0	0	0	0	0	0
Ped-Bike Adj(A_pbT)		1.00	1.00		1.00	1.00
Parking Bus, Adj	1.00	1.00	1.00	1.00	1.00	1.00
Adj Sat Flow, veh/h/ln	1863	1900	0	1863	1863	1900
Adj Flow Rate, veh/h	1393	339	0	754	288	0
Adj No. of Lanes	2	0	0	2	2	1
Peak Hour Factor	0.95	0.95	0.95	0.95	0.95	0.95
Percent Heavy Veh, %	2	2	0	2	2	0
Cap, veh/h	1793	426	0	2235	467	212
Arrive On Green	0.63	0.63	0.00	0.63	0.13	0.00
Sat Flow, veh/h	2932	674	0	3725	3548	1615
Grp Volume(v), veh/h	855	877	0	754	288	0
Grp Sat Flow(s),veh/h/ln	1770	1744	0	1770	1774	1615
Q Serve(g_s), s	17.5	18.9	0.0	5.1	3.9	0.0
Cycle Q Clear(g_c), s	17.5	18.9	0.0	5.1	3.9	0.0
Prop In Lane		0.39	0.00		1.00	1.00
Lane Grp Cap(c), veh/h	1117	1101	0	2235	467	212
V/C Ratio(X)	0.77	0.80	0.00	0.34	0.62	0.00
Avail Cap(c_a), veh/h	1118	1102	0	2236	1121	510
HCM Platoon Ratio	1.00	1.00	1.00	1.00	1.00	1.00
Upstream Filter(I)	1.00	1.00	0.00	1.00	1.00	0.00
Uniform Delay (d), s/veh	6.7	6.9	0.0	4.4	20.8	0.0
Incr Delay (d2), s/veh	3.2	4.2	0.0	0.1	1.3	0.0
Initial Q Delay(d3),s/veh	0.0	0.0	0.0	0.0	0.0	0.0
%ile BackOfQ(50%),veh/ln	9.3	10.0	0.0	2.4	2.0	0.0
LnGrp Delay(d),s/veh	9.9	11.1	0.0	4.5	22.1	0.0
LnGrp LOS	A	B		A	C	
Approach Vol, veh/h	1732			754	288	
Approach Delay, s/veh	10.5			4.5	22.1	
Approach LOS	B			A	C	

Timer	1	2	3	4	5	6	7	8
Assigned Phs				4		6		8
Phs Duration (G+Y+Rc), s				38.0		12.7		38.0
Change Period (Y+Rc), s				6.0		6.0		6.0
Max Green Setting (Gmax), s				32.0		16.0		32.0
Max Q Clear Time (g_c+I1), s				7.1		5.9		20.9
Green Ext Time (p_c), s				24.9		0.8		11.1

Intersection Summary	
HCM 2010 Ctrl Delay	10.1
HCM 2010 LOS	B

Notes

Movement	NBL	NBT	NBR	SBL	SBT	SBR	NEL	NET	NER	SWL	SWT	SWR
Lane Configurations												
Traffic Volume (veh/h)	0	1258	67	25	710	999	1474	1	0	5	1	11
Future Volume (veh/h)	0	1258	67	25	710	999	1474	1	0	5	1	11
Number	1	6	16	5	2	12	3	8	18	7	4	14
Initial Q (Qb), veh	0	0	0	0	0	0	0	0	0	0	0	0
Ped-Bike Adj(A_pbT)	1.00		1.00	1.00		1.00	1.00		1.00	1.00		1.00
Parking Bus, Adj	1.00	1.00	1.00	1.00	1.00	1.00	1.00	1.00	1.00	1.00	1.00	1.00
Adj Sat Flow, veh/h/ln	0	1863	1900	1863	1863	1863	1863	1863	0	1863	1863	1863
Adj Flow Rate, veh/h	0	1324	71	26	747	1052	1553	0	0	5	1	0
Adj No. of Lanes	0	2	0	1	2	1	2	1	0	1	1	1
Peak Hour Factor	0.95	0.95	0.95	0.95	0.95	0.95	0.95	0.95	0.95	0.95	0.95	0.95
Percent Heavy Veh, %	0	2	2	2	2	2	2	2	0	2	2	2
Cap, veh/h	0	1312	70	90	1593	1349	1426	749	0	11	11	10
Arrive On Green	0.00	0.38	0.38	0.02	0.45	0.45	0.40	0.00	0.00	0.01	0.01	0.00
Sat Flow, veh/h	0	3510	183	1774	3539	1583	3548	1863	0	1774	1863	1583
Grp Volume(v), veh/h	0	685	710	26	747	1052	1553	0	0	5	1	0
Grp Sat Flow(s),veh/h/ln	0	1770	1830	1774	1770	1583	1774	1863	0	1774	1863	1583
Q Serve(g_s), s	0.0	48.7	48.7	1.1	18.7	37.1	51.0	0.0	0.0	0.4	0.1	0.0
Cycle Q Clear(g_c), s	0.0	48.7	48.7	1.1	18.7	37.1	51.0	0.0	0.0	0.4	0.1	0.0
Prop In Lane	0.00		0.10	1.00		1.00	1.00		0.00	1.00		1.00
Lane Grp Cap(c), veh/h	0	680	703	90	1593	1349	1426	749	0	11	11	10
V/C Ratio(X)	0.00	1.01	1.01	0.29	0.47	0.78	1.09	0.00	0.00	0.47	0.09	0.00
Avail Cap(c_a), veh/h	0	680	703	183	1673	1385	1426	749	0	224	235	200
HCM Platoon Ratio	1.00	1.00	1.00	1.00	1.00	1.00	1.00	1.00	1.00	1.00	1.00	1.00
Upstream Filter(I)	0.00	1.00	1.00	1.00	1.00	1.00	1.00	0.00	0.00	1.00	1.00	0.00
Uniform Delay (d), s/veh	0.0	39.1	39.1	31.9	24.3	4.1	37.9	0.0	0.0	62.9	62.7	0.0
Incr Delay (d2), s/veh	0.0	36.3	36.6	1.7	0.2	2.9	52.0	0.0	0.0	28.8	3.4	0.0
Initial Q Delay(d3),s/veh	0.0	0.0	0.0	0.0	0.0	0.0	0.0	0.0	0.0	0.0	0.0	0.0
%ile BackOfQ(50%),veh/ln	0.0	30.5	31.6	0.6	9.2	37.6	35.1	0.0	0.0	0.3	0.0	0.0
LnGrp Delay(d),s/veh	0.0	75.4	75.7	33.6	24.5	7.0	89.9	0.0	0.0	91.6	66.1	0.0
LnGrp LOS		F	F	C	C	A	F			F	E	
Approach Vol, veh/h		1395			1825			1553			6	
Approach Delay, s/veh		75.6			14.5			89.9			87.4	
Approach LOS		E			B			F			F	

Timer	1	2	3	4	5	6	7	8
Assigned Phs		2		4	5	6		8
Phs Duration (G+Y+Rc), s		63.1		6.8	8.4	54.7		57.0
Change Period (Y+Rc), s		6.0		6.0	6.0	6.0		6.0
Max Green Setting (Gmax), s		60.0		16.0	9.0	45.0		51.0
Max Q Clear Time (g_c+I1), s		39.1		2.4	3.1	50.7		53.0
Green Ext Time (p_c), s		18.0		0.0	0.0	0.0		0.0

Intersection Summary	
HCM 2010 Ctrl Delay	56.9
HCM 2010 LOS	E

Notes

Movement	EBL	EBR	NBL	NBT	SBT	SBR
Lane Configurations						
Traffic Volume (veh/h)	0	350	298	1332	661	15
Future Volume (veh/h)	0	350	298	1332	661	15
Number	3	18	1	6	2	12
Initial Q (Qb), veh	0	0	0	0	0	0
Ped-Bike Adj(A_pbT)	1.00	1.00	1.00			1.00
Parking Bus, Adj	1.00	1.00	1.00	1.00	1.00	1.00
Adj Sat Flow, veh/h/ln	0	1863	1863	1863	1863	1863
Adj Flow Rate, veh/h	0	368	314	1402	696	0
Adj No. of Lanes	0	1	1	2	2	1
Peak Hour Factor	0.95	0.95	0.95	0.95	0.95	0.95
Percent Heavy Veh, %	0	2	2	2	2	2
Cap, veh/h	0	0	740	2953	1936	866
Arrive On Green	0.00	0.00	0.12	0.83	0.55	0.00
Sat Flow, veh/h	0		1774	3632	3632	1583
Grp Volume(v), veh/h	0.0		314	1402	696	0
Grp Sat Flow(s),veh/h/ln			1774	1770	1770	1583
Q Serve(g_s), s			2.2	3.9	4.0	0.0
Cycle Q Clear(g_c), s			2.2	3.9	4.0	0.0
Prop In Lane			1.00			1.00
Lane Grp Cap(c), veh/h			740	2953	1936	866
V/C Ratio(X)			0.42	0.47	0.36	0.00
Avail Cap(c_a), veh/h			965	3126	1936	866
HCM Platoon Ratio			1.00	1.00	1.00	1.00
Upstream Filter(I)			1.00	1.00	1.00	0.00
Uniform Delay (d), s/veh			2.5	0.8	4.6	0.0
Incr Delay (d2), s/veh			0.4	0.1	0.1	0.0
Initial Q Delay(d3),s/veh			0.0	0.0	0.0	0.0
%ile BackOfQ(50%),veh/ln			1.0	1.8	2.0	0.0
LnGrp Delay(d),s/veh			2.9	0.9	4.7	0.0
LnGrp LOS			A	A	A	
Approach Vol, veh/h				1716	696	
Approach Delay, s/veh				1.3	4.7	
Approach LOS				A	A	

Timer	1	2	3	4	5	6	7	8
Assigned Phs	1	2				6		
Phs Duration (G+Y+Rc), s	10.4	25.8				36.2		
Change Period (Y+Rc), s	6.0	6.0				6.0		
Max Green Setting (Gmax), s	9.0	17.0				32.0		
Max Q Clear Time (g_c+I1), s	4.2	6.0				5.9		
Green Ext Time (p_c), s	0.5	10.9				24.3		

Intersection Summary	
HCM 2010 Ctrl Delay	2.3
HCM 2010 LOS	A

Intersection	
Int Delay, s/veh	3.2

Movement	EBT	EBR	WBL	WBT	NBL	NBR
Traffic Vol, veh/h	1021	56	71	1565	70	67
Future Vol, veh/h	1021	56	71	1565	70	67
Conflicting Peds, #/hr	0	0	0	0	0	0
Sign Control	Free	Free	Free	Free	Stop	Stop
RT Channelized	-	None	-	None	-	None
Storage Length	-	-	100	-	0	-
Veh in Median Storage, #	0	-	-	0	2	-
Grade, %	0	-	-	0	0	-
Peak Hour Factor	90	90	90	90	90	90
Heavy Vehicles, %	2	2	2	2	2	2
Mvmt Flow	1134	62	79	1739	78	74

Major/Minor	Major1		Major2		Minor1	
Conflicting Flow All	0	0	1197	0	2193	598
Stage 1	-	-	-	-	1166	-
Stage 2	-	-	-	-	1027	-
Critical Hdwy	-	-	4.14	-	6.84	6.94
Critical Hdwy Stg 1	-	-	-	-	5.84	-
Critical Hdwy Stg 2	-	-	-	-	5.84	-
Follow-up Hdwy	-	-	2.22	-	3.52	3.32
Pot Cap-1 Maneuver	-	-	579	-	~ 39	445
Stage 1	-	-	-	-	259	-
Stage 2	-	-	-	-	306	-
Platoon blocked, %	-	-		-		
Mov Cap-1 Maneuver	-	-	579	-	~ 34	445
Mov Cap-2 Maneuver	-	-	-	-	135	-
Stage 1	-	-	-	-	259	-
Stage 2	-	-	-	-	264	-

Approach	EB	WB	NB
HCM Control Delay, s	0	0.5	60.7
HCM LOS			F

Minor Lane/Major Mvmt	NBLn1	EBT	EBR	WBL	WBT
Capacity (veh/h)	205	-	-	579	-
HCM Lane V/C Ratio	0.743	-	-	0.136	-
HCM Control Delay (s)	60.7	-	-	12.2	-
HCM Lane LOS	F	-	-	B	-
HCM 95th %tile Q(veh)	4.9	-	-	0.5	-

Notes

~: Volume exceeds capacity $: Delay exceeds 300s +: Computation Not Defined *: All major volume in platoon

Intersection	
Int Delay, s/veh	1.6

Movement	WBL	WBR	NBT	NBR	SBL	SBT
Traffic Vol, veh/h	0	33	104	0	17	109
Future Vol, veh/h	0	33	104	0	17	109
Conflicting Peds, #/hr	0	0	0	0	0	0
Sign Control	Stop	Stop	Free	Free	Free	Free
RT Channelized	-	None	-	None	-	None
Storage Length	0	-	-	-	-	-
Veh in Median Storage, #	0	-	0	-	-	0
Grade, %	0	-	0	-	-	0
Peak Hour Factor	90	90	90	90	90	90
Heavy Vehicles, %	2	2	2	2	2	2
Mvmt Flow	0	37	116	0	19	121

Major/Minor	Minor1		Major1		Major2	
Conflicting Flow All	275	116	0	0	116	0
Stage 1	116	-	-	-	-	-
Stage 2	159	-	-	-	-	-
Critical Hdwy	6.42	6.22	-	-	4.12	-
Critical Hdwy Stg 1	5.42	-	-	-	-	-
Critical Hdwy Stg 2	5.42	-	-	-	-	-
Follow-up Hdwy	3.518	3.318	-	-	2.218	-
Pot Cap-1 Maneuver	715	936	-	-	1473	-
Stage 1	909	-	-	-	-	-
Stage 2	870	-	-	-	-	-
Platoon blocked, %			-	-		-
Mov Cap-1 Maneuver	705	936	-	-	1473	-
Mov Cap-2 Maneuver	705	-	-	-	-	-
Stage 1	909	-	-	-	-	-
Stage 2	858	-	-	-	-	-

Approach	WB	NB	SB
HCM Control Delay, s	9	0	1
HCM LOS	A		

Minor Lane/Major Mvmt	NBT	NBR	WBLn1	SBL	SBT
Capacity (veh/h)	-	-	936	1473	-
HCM Lane V/C Ratio	-	-	0.039	0.013	-
HCM Control Delay (s)	-	-	9	7.5	0
HCM Lane LOS	-	-	A	A	A
HCM 95th %tile Q(veh)	-	-	0.1	0	-

Intersection	
Int Delay, s/veh	3.8

Movement	EBT	EBR	WBL	WBT	NBL	NBR
Traffic Vol, veh/h	1034	87	212	1644	49	128
Future Vol, veh/h	1034	87	212	1644	49	128
Conflicting Peds, #/hr	0	0	0	0	0	0
Sign Control	Free	Free	Free	Free	Stop	Stop
RT Channelized	-	None	-	None	-	None
Storage Length	-	-	150	-	0	0
Veh in Median Storage, #	0	-	-	0	2	-
Grade, %	0	-	-	0	0	-
Peak Hour Factor	90	90	90	90	90	90
Heavy Vehicles, %	2	2	2	2	2	2
Mvmt Flow	1149	97	236	1827	54	142

Major/Minor	Major1		Major2		Minor1	
Conflicting Flow All	0	0	1246	0	2581	623
Stage 1	-	-	-	-	1197	-
Stage 2	-	-	-	-	1384	-
Critical Hdwy	-	-	4.14	-	6.84	6.94
Critical Hdwy Stg 1	-	-	-	-	5.84	-
Critical Hdwy Stg 2	-	-	-	-	5.84	-
Follow-up Hdwy	-	-	2.22	-	3.52	3.32
Pot Cap-1 Maneuver	-	-	554	-	~ 21	429
Stage 1	-	-	-	-	249	-
Stage 2	-	-	-	-	198	-
Platoon blocked, %	-	-		-		
Mov Cap-1 Maneuver	-	-	554	-	~ 12	429
Mov Cap-2 Maneuver	-	-	-	-	76	-
Stage 1	-	-	-	-	249	-
Stage 2	-	-	-	-	114	-

Approach	EB	WB	NB
HCM Control Delay, s	0	1.9	48
HCM LOS			E

Minor Lane/Major Mvmt	NBLn1	NBLn2	EBT	EBR	WBL	WBT
Capacity (veh/h)	76	429	-	-	554	-
HCM Lane V/C Ratio	0.716	0.332	-	-	0.425	-
HCM Control Delay (s)	127.6	17.5	-	-	16.2	-
HCM Lane LOS	F	C	-	-	C	-
HCM 95th %tile Q(veh)	3.4	1.4	-	-	2.1	-

Notes

~: Volume exceeds capacity $: Delay exceeds 300s +: Computation Not Defined *: All major volume in platoon

Movement	EBL	EBT	EBR	WBL	WBT	WBR	NBL	NBT	NBR	SBL	SBT	SBR
Lane Configurations												
Traffic Volume (veh/h)	31	1098	33	26	1782	44	54	3	4	209	0	21
Future Volume (veh/h)	31	1098	33	26	1782	44	54	3	4	209	0	21
Number	3	8	18	7	4	14	1	6	16	5	2	12
Initial Q (Qb), veh	0	0	0	0	0	0	0	0	0	0	0	0
Ped-Bike Adj(A_pbT)	1.00		1.00	1.00		1.00	1.00		1.00	1.00		1.00
Parking Bus, Adj	1.00	1.00	1.00	1.00	1.00	1.00	1.00	1.00	1.00	1.00	1.00	1.00
Adj Sat Flow, veh/h/ln	1863	1863	1900	1863	1863	1863	1900	1863	1900	1900	1863	1863
Adj Flow Rate, veh/h	34	1193	36	28	1937	48	59	3	4	227	0	23
Adj No. of Lanes	1	2	0	1	2	1	0	1	0	0	1	1
Peak Hour Factor	0.92	0.92	0.92	0.92	0.92	0.92	0.92	0.92	0.92	0.92	0.92	0.92
Percent Heavy Veh, %	2	2	2	2	2	2	2	2	2	2	2	2
Cap, veh/h	135	2069	62	286	2088	934	230	13	9	465	0	347
Arrive On Green	0.59	0.59	0.59	0.59	0.59	0.59	0.22	0.22	0.22	0.22	0.00	0.22
Sat Flow, veh/h	218	3508	106	452	3539	1583	552	58	39	1599	0	1583
Grp Volume(v), veh/h	34	602	627	28	1937	48	66	0	0	227	0	23
Grp Sat Flow(s),veh/h/ln	218	1770	1844	452	1770	1583	649	0	0	1599	0	1583
Q Serve(g_s), s	5.9	13.3	13.3	2.6	31.1	0.8	2.5	0.0	0.0	0.0	0.0	0.7
Cycle Q Clear(g_c), s	37.0	13.3	13.3	15.8	31.1	0.8	10.2	0.0	0.0	7.7	0.0	0.7
Prop In Lane	1.00		0.06	1.00		1.00	0.89		0.06	1.00		1.00
Lane Grp Cap(c), veh/h	135	1044	1088	286	2088	934	251	0	0	465	0	347
V/C Ratio(X)	0.25	0.58	0.58	0.10	0.93	0.05	0.26	0.00	0.00	0.49	0.00	0.07
Avail Cap(c_a), veh/h	135	1044	1088	286	2088	934	302	0	0	516	0	404
HCM Platoon Ratio	1.00	1.00	1.00	1.00	1.00	1.00	1.00	1.00	1.00	1.00	1.00	1.00
Upstream Filter(I)	1.00	1.00	1.00	1.00	1.00	1.00	1.00	0.00	0.00	1.00	0.00	1.00
Uniform Delay (d), s/veh	29.6	8.0	8.0	12.9	11.7	5.4	25.8	0.0	0.0	22.2	0.0	19.4
Incr Delay (d2), s/veh	1.0	0.8	0.8	0.1	7.9	0.0	0.6	0.0	0.0	0.8	0.0	0.1
Initial Q Delay(d3),s/veh	0.0	0.0	0.0	0.0	0.0	0.0	0.0	0.0	0.0	0.0	0.0	0.0
%ile BackOfQ(50%),veh/ln	0.6	6.6	6.9	0.3	17.1	0.4	1.1	0.0	0.0	3.6	0.0	0.3
LnGrp Delay(d),s/veh	30.6	8.8	8.8	13.1	19.6	5.5	26.4	0.0	0.0	22.9	0.0	19.5
LnGrp LOS	C	A	A	B	B	A	C			C		B
Approach Vol, veh/h		1263			2013			66			250	
Approach Delay, s/veh		9.4			19.1			26.4			22.6	
Approach LOS		A			B			C			C	

Timer	1	2	3	4	5	6	7	8
Assigned Phs		2		4		6		8
Phs Duration (G+Y+Rc), s		19.7		43.0		19.7		43.0
Change Period (Y+Rc), s		6.0		6.0		6.0		6.0
Max Green Setting (Gmax), s		16.0		37.0		16.0		37.0
Max Q Clear Time (g_c+I1), s		9.7		33.1		12.2		39.0
Green Ext Time (p_c), s		2.4		3.9		1.6		0.0

Intersection Summary	
HCM 2010 Ctrl Delay	16.1
HCM 2010 LOS	B

Movement	EBT	EBR	WBL	WBT	NBL	NBR
Lane Configurations						
Traffic Volume (veh/h)	982	337	0	1496	497	8
Future Volume (veh/h)	982	337	0	1496	497	8
Number	8	18	7	4	1	16
Initial Q (Qb), veh	0	0	0	0	0	0
Ped-Bike Adj(A_pbT)		1.00	1.00		1.00	1.00
Parking Bus, Adj	1.00	1.00	1.00	1.00	1.00	1.00
Adj Sat Flow, veh/h/ln	1863	1900	0	1863	1863	1900
Adj Flow Rate, veh/h	1034	355	0	1575	530	0
Adj No. of Lanes	2	0	0	2	2	1
Peak Hour Factor	0.95	0.95	0.95	0.95	0.95	0.95
Percent Heavy Veh, %	2	2	0	2	2	0
Cap, veh/h	1511	513	0	2061	707	322
Arrive On Green	0.58	0.58	0.00	0.58	0.20	0.00
Sat Flow, veh/h	2688	882	0	3725	3548	1615
Grp Volume(v), veh/h	702	687	0	1575	530	0
Grp Sat Flow(s),veh/h/ln	1770	1707	0	1770	1774	1615
Q Serve(g_s), s	15.1	15.5	0.0	18.4	7.7	0.0
Cycle Q Clear(g_c), s	15.1	15.5	0.0	18.4	7.7	0.0
Prop In Lane		0.52	0.00		1.00	1.00
Lane Grp Cap(c), veh/h	1030	994	0	2061	707	322
V/C Ratio(X)	0.68	0.69	0.00	0.76	0.75	0.00
Avail Cap(c_a), veh/h	1031	994	0	2061	1033	470
HCM Platoon Ratio	1.00	1.00	1.00	1.00	1.00	1.00
Upstream Filter(I)	1.00	1.00	0.00	1.00	1.00	0.00
Uniform Delay (d), s/veh	7.9	8.0	0.0	8.6	20.7	0.0
Incr Delay (d2), s/veh	1.8	2.1	0.0	1.8	1.8	0.0
Initial Q Delay(d3),s/veh	0.0	0.0	0.0	0.0	0.0	0.0
%ile BackOfQ(50%),veh/ln	7.7	7.6	0.0	9.3	3.9	0.0
LnGrp Delay(d),s/veh	9.8	10.1	0.0	10.4	22.5	0.0
LnGrp LOS	A	B		B	C	
Approach Vol, veh/h	1389			1575	530	
Approach Delay, s/veh	9.9			10.4	22.5	
Approach LOS	A			B	C	

Timer	1	2	3	4	5	6	7	8
Assigned Phs				4		6		8
Phs Duration (G+Y+Rc), s				38.0		17.0		38.0
Change Period (Y+Rc), s				6.0		6.0		6.0
Max Green Setting (Gmax), s				32.0		16.0		32.0
Max Q Clear Time (g_c+I1), s				20.4		9.7		17.5
Green Ext Time (p_c), s				11.6		1.2		14.5

Intersection Summary	
HCM 2010 Ctrl Delay	12.0
HCM 2010 LOS	B

Notes

Movement	NBL	NBT	NBR	SBL	SBT	SBR	NEL	NET	NER	SWL	SWT	SWR
Lane Configurations												
Traffic Volume (veh/h)	0	852	3	34	2043	1637	1157	16	0	21	8	14
Future Volume (veh/h)	0	852	3	34	2043	1637	1157	16	0	21	8	14
Number	1	6	16	5	2	12	3	8	18	7	4	14
Initial Q (Qb), veh	0	0	0	0	0	0	0	0	0	0	0	0
Ped-Bike Adj(A_pbT)	1.00		1.00	1.00		1.00	1.00		1.00	1.00		1.00
Parking Bus, Adj	1.00	1.00	1.00	1.00	1.00	1.00	1.00	1.00	1.00	1.00	1.00	1.00
Adj Sat Flow, veh/h/ln	0	1863	1900	1863	1863	1863	1863	1863	0	1863	1863	1863
Adj Flow Rate, veh/h	0	897	3	36	2151	1723	1230	0	0	22	8	0
Adj No. of Lanes	0	2	0	1	2	1	2	1	0	1	1	1
Peak Hour Factor	0.95	0.95	0.95	0.95	0.95	0.95	0.95	0.95	0.95	0.95	0.95	0.95
Percent Heavy Veh, %	0	2	2	2	2	2	2	2	0	2	2	2
Cap, veh/h	0	1678	6	271	1882	1335	1105	580	0	36	38	32
Arrive On Green	0.00	0.46	0.46	0.02	0.53	0.53	0.31	0.00	0.00	0.02	0.02	0.00
Sat Flow, veh/h	0	3711	12	1774	3539	1583	3548	1863	0	1774	1863	1583
Grp Volume(v), veh/h	0	439	461	36	2151	1723	1230	0	0	22	8	0
Grp Sat Flow(s),veh/h/ln	0	1770	1861	1774	1770	1583	1774	1863	0	1774	1863	1583
Q Serve(g_s), s	0.0	23.3	23.3	1.4	70.0	70.0	41.0	0.0	0.0	1.6	0.6	0.0
Cycle Q Clear(g_c), s	0.0	23.3	23.3	1.4	70.0	70.0	41.0	0.0	0.0	1.6	0.6	0.0
Prop In Lane	0.00		0.01	1.00		1.00	1.00		0.00	1.00		1.00
Lane Grp Cap(c), veh/h	0	821	863	271	1882	1335	1105	580	0	36	38	32
V/C Ratio(X)	0.00	0.53	0.53	0.13	1.14	1.29	1.11	0.00	0.00	0.61	0.21	0.00
Avail Cap(c_a), veh/h	0	821	863	353	1882	1335	1105	580	0	216	226	192
HCM Platoon Ratio	1.00	1.00	1.00	1.00	1.00	1.00	1.00	1.00	1.00	1.00	1.00	1.00
Upstream Filter(I)	0.00	1.00	1.00	1.00	1.00	1.00	1.00	0.00	0.00	1.00	1.00	0.00
Uniform Delay (d), s/veh	0.0	25.2	25.2	19.3	30.8	7.1	45.3	0.0	0.0	64.0	63.5	0.0
Incr Delay (d2), s/veh	0.0	0.7	0.6	0.2	71.3	136.6	63.8	0.0	0.0	15.7	2.8	0.0
Initial Q Delay(d3),s/veh	0.0	0.0	0.0	0.0	0.0	0.0	0.0	0.0	0.0	0.0	0.0	0.0
%ile BackOfQ(50%),veh/ln	0.0	11.5	12.1	0.7	52.6	98.9	29.7	0.0	0.0	1.0	0.3	0.0
LnGrp Delay(d),s/veh	0.0	25.8	25.8	19.5	102.2	143.7	109.1	0.0	0.0	79.7	66.2	0.0
LnGrp LOS		C	C	B	F	F	F			E	E	
Approach Vol, veh/h		900			3910			1230			30	
Approach Delay, s/veh		25.8			119.7			109.1			76.1	
Approach LOS		C			F			F			E	

Timer	1	2	3	4	5	6	7	8
Assigned Phs		2		4	5	6		8
Phs Duration (G+Y+Rc), s		76.0		8.7	8.9	67.1		47.0
Change Period (Y+Rc), s		6.0		6.0	6.0	6.0		6.0
Max Green Setting (Gmax), s		70.0		16.0	9.0	55.0		41.0
Max Q Clear Time (g_c+I1), s		72.0		3.6	3.4	25.3		43.0
Green Ext Time (p_c), s		0.0		0.1	0.0	29.7		0.0

Intersection Summary	
HCM 2010 Ctrl Delay	103.4
HCM 2010 LOS	F

Notes

Movement	EBL	EBR	NBL	NBT	SBT	SBR
Lane Configurations						
Traffic Volume (veh/h)	0	430	602	844	1436	22
Future Volume (veh/h)	0	430	602	844	1436	22
Number	3	18	1	6	2	12
Initial Q (Qb), veh	0	0	0	0	0	0
Ped-Bike Adj(A_pbT)	1.00	1.00	1.00			1.00
Parking Bus, Adj	1.00	1.00	1.00	1.00	1.00	1.00
Adj Sat Flow, veh/h/ln	0	1863	1863	1863	1863	1863
Adj Flow Rate, veh/h	0	453	634	888	1512	0
Adj No. of Lanes	0	1	1	2	2	1
Peak Hour Factor	0.95	0.95	0.95	0.95	0.95	0.95
Percent Heavy Veh, %	0	2	2	2	2	2
Cap, veh/h	0	0	680	3326	2100	939
Arrive On Green	0.00	0.00	0.29	0.94	0.59	0.00
Sat Flow, veh/h	0		1774	3632	3632	1583
Grp Volume(v), veh/h	0.0		634	888	1512	0
Grp Sat Flow(s),veh/h/ln			1774	1770	1770	1583
Q Serve(g_s), s			24.5	2.0	30.3	0.0
Cycle Q Clear(g_c), s			24.5	2.0	30.3	0.0
Prop In Lane			1.00			1.00
Lane Grp Cap(c), veh/h			680	3326	2100	939
V/C Ratio(X)			0.93	0.27	0.72	0.00
Avail Cap(c_a), veh/h			883	3618	2100	939
HCM Platoon Ratio			1.00	1.00	1.00	1.00
Upstream Filter(I)			1.00	1.00	1.00	0.00
Uniform Delay (d), s/veh			25.8	0.2	14.4	0.0
Incr Delay (d2), s/veh			13.9	0.0	1.2	0.0
Initial Q Delay(d3),s/veh			0.0	0.0	0.0	0.0
%ile BackOfQ(50%),veh/ln			19.4	0.9	15.1	0.0
LnGrp Delay(d),s/veh			39.7	0.3	15.6	0.0
LnGrp LOS			D	A	B	
Approach Vol, veh/h				1522	1512	
Approach Delay, s/veh				16.7	15.6	
Approach LOS				B	B	

Timer	1	2	3	4	5	6	7	8
Assigned Phs	1	2				6		
Phs Duration (G+Y+Rc), s	34.6	65.2				99.8		
Change Period (Y+Rc), s	6.0	6.0				6.0		
Max Green Setting (Gmax), s	40.6	56.0				102.0		
Max Q Clear Time (g_c+I1), s	26.5	32.3				4.0		
Green Ext Time (p_c), s	2.1	23.6				89.8		

Intersection Summary	
HCM 2010 Ctrl Delay	16.2
HCM 2010 LOS	B

Appendix G

Turn Lane Analysis Worksheets

RIGHT-TURN LANE WARRANT REVIEW

INTERSECTION: Fleming Road & Project Driveway
MOVEMENT Northbound Right-Turn Lane

May 2003 INTERSECTIONS 15.5(3)

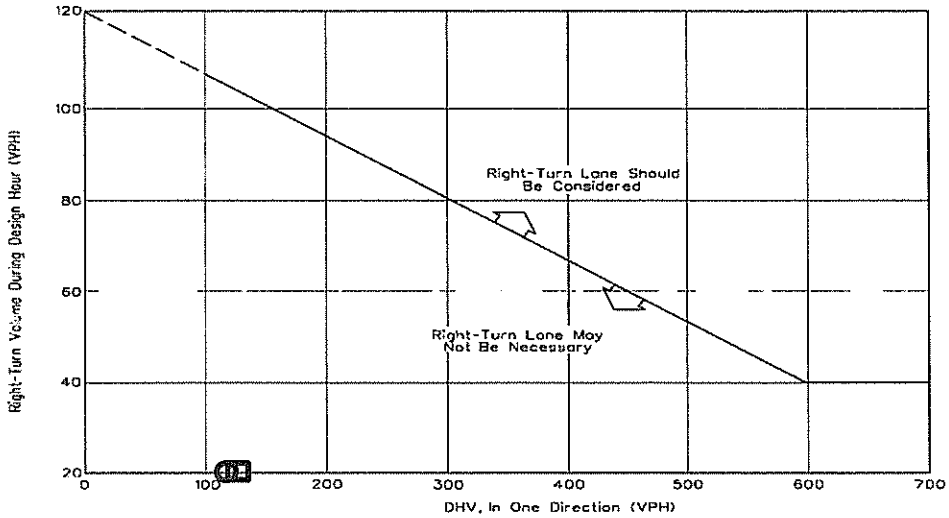

Note: For highways with a design speed below 50 miles per hour with a DHV < 300 and where right turns > 40, an adjustment should be used. To read the vertical axis of the chart, subtract 20 from the actual number of right turns.

Example

Given: Design Speed = 35 miles per hour (mph)
DHV = 250 vehicles per hour (vph)
Right Turns = 100 vehicles per hour (vph)

Problem: Determine if a right-turn lane is necessary.

Solution: To read the vertical axis, use 100 – 20 = 80 vehicles per hour. The figure indicates that a right-turn lane is not necessary, unless other factors (e.g., high crash rate) indicate a lane is needed.

GUIDELINES FOR RIGHT-TURN LANES AT UNSIGNALIZED INTERSECTIONS ON TWO-LANE HIGHWAYS

Figure 15.5A

2018 Build Conditions	Major Road Volume (Direction of Right Turn Ingress)	Right Turn Volume	Speed along Right Turn Ingress	Symbol
AM Peak Hour	103	0	35	○
PM Peak Hour	104	0	35	□

K2.)

Ratification Number_____

AN ORDINANCE

TO AMEND THE ZONING ORDINANCE OF THE CITY OF CHARLESTON BY CHANGING THE ZONE MAP, WHICH IS A PART THEREOF, SO THAT PROPERTY LOCATED ON COBURG ROAD (OVERTURE PUD) (WEST ASHLEY) (APPROXIMATELY 6.15 ACRES) (TMS# 349-08-00-001) (COUNCIL DISTRICT 11), BE REZONED FROM GENERAL BUSINESS (GB) CLASSIFICATION TO PLANNED UNIT DEVELOPMENT (PUD) CLASSIFICATION. THE PROPERTY IS OWNED BY ST. ANDREWS PARISH LLC. **(AS AMENDED)**

BE IT ORDAINED BY THE MAYOR AND COUNCILMEMBERS OF CHARLESTON, IN CITY COUNCIL ASSEMBLED:

Section 1. That the Zoning Ordinance of the City of Charleston be, and the same hereby is amended, by changing the zone map thereof so as to rezone the property described in Section 2 hereof by changing the zoning designation from General Business (GB) classification to Planned Unit Development (PUD) classification.

Section 2. The property to be rezoned is described as follows:

Property located on Coburg Road (Overture PUD) (West Ashley) (approximately 6.15 acres) (TMS #349-08-00-001)

Section 3. This ordinance shall become effective upon ratification.

Ratified in City Council this _____day of _____ in the Year of Our Lord _____, in the _____ Year of Independence of the United States of America.

By: _____
John J. Tecklenburg
Mayor, City of Charleston

Attest: _____
Vanessa Turner Maybank
Clerk of Council

City of Charleston

Planning Commission
October 19, 2016

Area

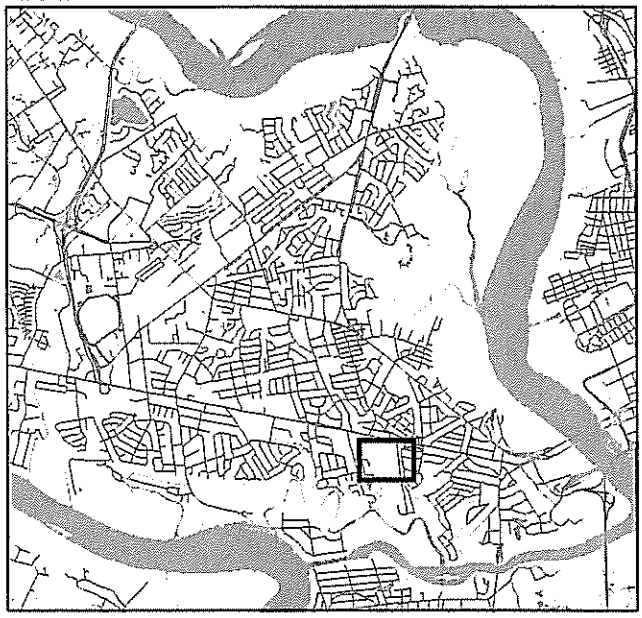

Rezoning 1

Coburg Rd (West Ashley)

TMS# 3490800001

6.15 ac.

Request rezoning from General Business (GB) to Planned Unit Development (PUD).

Owner: St. Andrews Parish LLC
Applicant: Seamon, Whiteside & Assoc. Inc

Location

N

OVERTURE | WEST ASHLEY
PLANNED UNIT DEVELOPMENT

CITY OF CHARLESTON, SOUTH CAROLINA

City of Charleston Project ID #160906-CoburgRd-1

Project Location:
175 Coburg Road
Charleston, South Carolina 29407
TMS # 3490800001

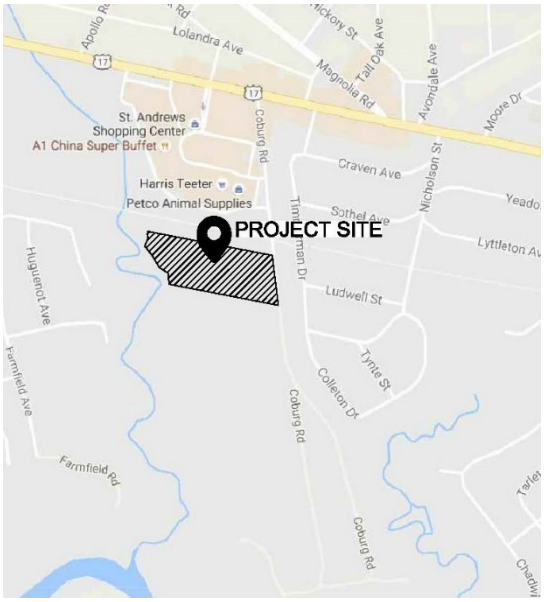

Current Property Owner:
St. Andrews Parish LLC
175 Coburg Road
Charleston, SC 29407

Developer:
Greystar GP II, LLC
18 Broad St., Suite 300
Charleston, SC 29401

Architect:
Meeks + Partners
16000 Memorial Drive, Suite 100
Houston, TX 77079

Landscape Architects + Civil Engineers:
Seamon Whiteside (SW+)
501 Wando Park Boulevard, Suite 200
Mount Pleasant, South Carolina 29464
843-884-1667

December 13, 2016

OVERTURE | WEST ASHLEY | PLANNED UNIT DEVELOPMENT
CITY OF CHARLESTON, SOUTH CAROLINA

Section 1| RELATIONSHIP TO THE CITY OF CHARLESTON ZONING ORDINANCE

The Development Guidelines and Land Use Plan for the Overture West Ashley Planned Unit Development (PUD), attached hereto and made a part hereof, are part of the PUD conditional use Master Plan application submitted in accordance with the Zoning Ordinance of the City of Charleston, Article 2, Part 7 Sections 54-250, et seq. The Zoning Ordinance of the City of Charleston is incorporated herein by reference, except as amended herein. No person shall erect or alter any building, structure, or sign on any tract of land or use any tract of land within the Overture West Ashley PUD except in conformance with these guidelines and regulations. Unless modified herein, definitions of terms used in the Overture West Ashley PUD Development Guidelines shall follow definitions listed in the Zoning Ordinance of the City of Charleston, as amended from time to time. Administration and enforcement of the adopted Overture West Ashley PUD Master Plan shall follow Article 9 of the Zoning Ordinance of the City of Charleston. The Overture West Ashley PUD Master Plan was approved by Charleston City Council on (date), Ordinance Number _____.

Statement of Purpose and Compatibility: Per the City of Charleston's Criteria for Review, Sec. 54-254, there are eleven requirements for all PUD Master Plans. This project meets all of these requirements and they are as follows:

a) Is consistent with the City's adopted comprehensive plan and sub-areas for the City, especially sections of the Century V Plan that addresses walkable neighborhoods, compatible mixing of building types, infill and redevelopment, easy access of residents to recreational opportunities and providing a full spectrum of housing types within neighborhoods
b) Better achieves the goals of adopted plans than would development under other zoning district regulations by introducing another residential type, such as a Work Force Housing component, instead of a commercial or office use in such close proximity to existing neighborhoods and open space
c) Is consistent with the City's adopted master road plan in that it utilizes the existing street network.
d) Better protects and preserves natural and cultural resources than would development under other zoning district regulations by increasing the open space percentage to 20%, which is above the base zoning and keeps areas adjacent to the marsh as open vistas.
e) Is compatible with the density and maximum building height of adjacent developed neighborhoods and the zoning of adjacent undeveloped areas in that existing zoning allows 26.4 units per acre and a 55' building height. Additionally, the building steps down to two stories where it fronts Byrnes Downs and is located to the rear of a large shopping center.
f) Is compatible with the existing network of public streets in adjacent neighborhoods and areas by formally addressing Coburg Road, but is set-back consistent with other nearby buildings.
g) Provides adequate parking for senior residents, guests, and users of the PUD for this project type and use, reduces stormwater impacts, and reduces urban heat island effects.
h) Can be accommodated by existing and planned public facilities including but not limited to, roads, sewer, water, schools and parks. All utility services are available. Traffic will be impacted significantly less due to senior housing use as compared to base zoning. Schools

will not be impacted and additional users to the adjacent West Ashley Greenway will be a positive attribute.

i) Provides adequate public facilities, open space, and recreational amenities. The community will provide exceptional amenity space, both interior and exterior, to the resident population base. Visitors will also be able to enjoy these abundant resources.

j) Adequately provides for the continued maintenance of common areas, open space, and other public facilities not dedicated to the City. This will be a professionally managed residential community with appropriate budget and reserves to maintain a high-level of curb appeal.

k) Provides for a mixture of uses. The community will have a salon that is open to the public, as well as a community gathering room, fitness center, movie room, and game room.

Section 2 | INTRODUCTION

This project is an age restricted multi-family development located on a 6.15 acre site in the West Ashley area of the City of Charleston, SC (TMS # 3490800001 – 175 Coburg Road). The site's current zoning is General Business (GB). The Project Site abuts Coburg Road (a private road) to its east; the marshes of Wappoo Creek to its West; and property currently zoned SR-1 to its south -- which has historically been called the Coburg Property. On the north, the site abuts the West Ashley Greenway, which stretches for over 10 miles, providing a major amenity for the residents.

The current property owner is St. Andrews Parish, LLC, 175 Coburg Road, Charleston, SC 29407. The project is being developed by Greystar GP II, LLC, 18 Broad St., Suite 300, Charleston, SC 29401. The target market for this project are Baby Boomers that remain active and have a desire to age-in-place within their existing community. The site is located in an area of West Ashley known to be very diverse and walkable. There are coffee shops, a major grocer, banks, restaurants, and many other destinations within a five minute walk of the site. Within a 10-minute walk are churches, a school, a tennis center, a major health food grocer (planned), and other amenities. Within a 15-minute walk there is a library, a bakery, another health food grocer, more restaurants, and other amenities. The site also is adjacent to Byrnes Downs, a single family neighborhood developed in the early 1940s that is made up of small brick homes on tree lined streets. The project will have a mix of 1 bedroom and 2 bedroom units. Units will be served by conveniently located surface parking. *See Context Map, Neighborhood Map and Conceptual Master Plan.*

Section 3 | LAND USE

3.1 Highland Acres:	6.15
3.2 Wetland Acres:	0.00
3.3 Net Acres:	6.15
3.4 Maximum Net Allowable Density:	32.20 Units per Acre (198 maximum units)

Section 4 | ZONING CRITERIA

Approved Land Uses include the following:

4.1 Age Restricted Multi-Family Residential

A. All leaseholders will be 55 years of age or older.

B. Leases shall not be reassigned and units shall not be sub-leased.

C. 5% of the residential units (rounded up) shall be "80% AMI Workforce Housing Units" and 10% of the residential units (rounded up) shall be "120% AMI Workforce Housing Units" and defined as follows:

1. 80% AMI Workforce Housing Unit:

   a. *If rental,* a dwelling unit, where occupants have, in the aggregate, having a household income less than or equal to eighty (80%) percent of the area median income (AMI) for rental units. Area Median Income (AMI) shall be determined annually by the United States Department of Housing and Urban Development as adjusted by the City of Charleston Department of Housing and Community Development, or their successors.

   b. *If owner-occupied,* A dwelling unit where at least one occupant is an owner, and where all occupants have, in the aggregate, household income less than or equal to one hundred twenty (120%) percent of the Area Median Income (AMI) for owner occupied units. Area median income (AMI) shall be determined annually by the United States Department of Housing and Urban Development as adjusted by the City of Charleston Department of Housing and Community Development, or their successors.

2. 120% AMI Workforce Housing Unit:

   a. *If rental,* a dwelling unit, where occupants have, in the aggregate, having a household income less than or equal to one hundred twenty (120%) percent of the Area Median Income (AMI) for rental units. AMI shall be determined annually by the United States Department of Housing and Urban Development as adjusted by the City of Charleston Department of Housing and Community Development, or their successors.

   b. *If owner-occupied,* a dwelling unit where at least one occupant is an owner, and where all occupants have, in the aggregate, household income less than or equal to one hundred twenty (120%) percent of the area median income (AMI) for owner occupied units. Area median income (AMI) shall be determined annually by the United States Department of Housing and Urban Development as adjusted by the City of Charleston Department of Housing and Community Development, or their successors.

3. Workforce Housing status shall remain in effect for twenty (20) years from time of completion.

4. Owner shall enter into a Memorandum of Understanding (MOU) with the City to further define this use.

D. Prior to the issuance of a certificate of occupancy for any portion of the development, the owner thereof shall enter into a Memorandum of Understanding (MOU) with the City of Charleston Department of Housing and Community Development, or its successor, detailing the number of units designated as owner occupied workforce housing units and/or rental workforce housing units.

E. Prior to the issuance of a certificate of occupancy for any portion of a development, the owner shall execute a Memorandum of Understanding (MOU) with the City of Charleston identifying the owner occupied workforce housing units and/or rental workforce housing units and restricting such units to occupancy, and if applicable ownership, by qualified households for a period of no less than twenty (20) years, and submit a copy of the Memorandum of Understanding (MOU) to the City of Charleston Department of Housing and Community Development, or its successor.

F. As for the owner occupied workforce housing units, the Memorandum of Understanding (MOU) shall identify the initial maximum allowable sales price, and provide that the initial maximum allowable sales price may be adjusted annually for inflation based on the increase in the area median income (AMI) or Consumer Price Index, whichever is greater. Each owner of such units, prior to initial occupancy, shall be required to submit to the City of Charleston Department of Housing and Community Development, or its successor, a verified income report of household income of all members of the household. The Memorandum of Understanding (MOU) shall require notice to the City of Charleston Department of Housing and Community Development, or its successor, of any transfer of the owner occupied workforce housing units and verification that the purchaser is a qualified household. Owner occupied workforce housing units shall be subject to resale restrictions for no fewer than twenty (20) years from date of initial sale of the property. Such restrictions will be included in the Memorandum of Understanding (MOU).

G. As for rental workforce housing units, the Memorandum of Understanding (MOU) shall require the owner to provide proof to the City of Charleston Department of Housing and Community Development, or its successor, at inception and on an annual basis, that no more than fair market rent, as defined by the United States Department of Housing and Urban Development, is being charged for the unit(s), and verified income reports of household income of all rental occupants. Rental workforce housing units shall be subject to these restrictions for no fewer than twenty (20) years from the initial occupancy as workforce housing.

H. The Memorandum of Understanding (MOU) shall accord the City of Charleston, or its assignee, rights to enforcement by any legal and/or equitable means, including the revocation of a certificate of occupancy, and in all events be subject to approval by corporation counsel.

4.2 Support Uses: Support uses are allowed within the development. These are uses that serve the residential uses, including but not limited to meeting rooms, leasing offices, exercise rooms, activity rooms, dining areas, a catering kitchen, and common spaces.

4.3 Commercial Uses: Commercial Uses are allowed within the development. These are in support of the residential use but are open to the general public. Commercial uses shall be restricted to operating hours of 8:00 AM to 7:00 PM. Examples of possible commercial uses may include a nail salon, hair salon, or gift shop.

4.4 Maximum Commercial Space: The maximum allowable square footage of commercial space shall be 5,000 SF. There are no maximum allowable square footage for Support Uses.

4.5 Parking Requirements: There shall be a minimum of 1.2 parking spaces per residential unit, regardless of unit type. There are no specific requirements for parking for Employees, Support Uses, or Commercial Land Uses. The unit of measure used to calculate parking includes allowances for anticipated employee and visitor parking. Parking shall comply with ADA. *See Site Plan*.

4.6 Other Allowed Uses: Should the Age Restricted Residential project not be built, the uses allowed on the parcel would be those uses allowed within the City of Charleston within General Business are also allowed on this parcel. In that case, parking requirements would also follow those that apply to General Business.

4.7 Setbacks: There are no building setback requirements except for the 10'-0" building setback off the OCRM critical line buffer (as per City of Charleston requirements).

4.8 Building Heights: The maximum building height shall be 55', measured from the edge of pavement on Coburg Road to the eave and a maximum of four habitable floors. The four habitable floors allowance does not include elevator, stairwell, or foyer spaces at grade.

4.9 Loading Docks: Loading docks shall not be required. Loading and unloading will be accommodated in regular parking spaces and in drop off areas.

4.10 Maximum Lot Occupancy: There are no maximum lot occupancy restrictions, other than meeting the open space requirements for the project.

Section 5 | OPEN SPACE

There shall be a minimum of 20% Open Space on the site. This may include landscape buffers, plazas, courtyards, swimming pool, swimming pool deck areas, outdoor amenity areas, sidewalks, and dog walk areas. 25% of the Open Space shall be improved so as to be useable by the residents of the development. This may include walking trails, connections to the Greenway, swimming pool areas, courtyards, overlooks, etc. Open Space shall be maintained by the property management organization. *See Open Space Plan*.

Section 6 | BUFFERS

There shall be a minimum 5'-0" landscaped buffer along the north, south, and east property lines. There shall also be a minimum 40' buffer along the OCRM critical line (as per City of Charleston requirements). Landscape Buffers may include fences, walls, gates, paths, trees, shrubs, groundcover, lawns, or mulch areas. The OCRM Buffer may include pervious walking paths, benches, mulch, and native plantings. *See Open Space Plan*.

Section 7 | TREE SUMMARY

The survey has identified all existing trees on the parcel. The Grand Trees have been evaluated by Natural Directions, LLC. The project will comply with all Tree Protection Requirements of the City of Charleston, Article 3 Part 6.

Section 8 | RIGHT-OF-WAY

The project fronts Coburg Road, a privately maintained road. There shall be no public Rights-of-Way internal to the project site. Vehicular ingress and egress shall be from Coburg Road. A 5' wide concrete sidewalk will be constructed across the frontage of the project on one side of Coburg Road, within the private right-of-way.

Section 9 | DRAINAGE BASIN ANALYSIS

The project site is on FEMA map 45019C0513J, effective on 11/17/2004 and is in Zone AE 11. The existing grades on the site vary but the average is approximately at elevation 8 to 10 feet MSL. The site is relatively flat but there is some grade change along the OCRM critical line. There are no wetlands on the site but the property is adjacent to the ORCM critical line and has frontage along the marsh and tributaries of Wappoo Creek.

Due to proximity of the site to the marshes of Wappoo Creek, the project will seek a stormwater detention variance per Section 2.10 of the City of Charleston Stormwater Design Standards Manual (SWDSM), provided that the release rates will have no significant adverse impact on the receiving natural waterway or downstream properties. The stormwater quality standards outlined in Section 3 of the SWDSM shall be met by the utilization of accepted water quality BMP's for this development. A portion of the stormwater facilities shall be located off site, on adjacent property south of the parcel. The project shall comply with all requirements of the City of Charleston and SCDHEC/OCRM. See Conceptual Grading and Drainage Plan.

Section 10 | TRAFFIC STUDY (under separate cover)

A traffic study has been completed by Bihl Engineering, LLC, dated August 23, 2016. In addition, a Sensitivity Analysis for Byrnes Downs, dated December 9, 2016 was also completed by Bihl Engineering, LLC. According to both studies, no off-site roadway improvements are recommended as all intersections, including those internal to Byrnes Downs, will continue to operate acceptably after construction.

Section 11 | CULTURAL RESOURCES (N/A)

Archaeological Studies have not been conducted for the site at this time. The property has a long history of use as a dairy farm and more recently for low density residential use, although no structures are on this parcel. No known archaeological sites have been found on the property. A review of the SHPO website yielded no results of known historic or cultural sites, and a copy of the SHPO Map is attached for reference Appendix.

Section 12 | LETTERS OF COORDINATION

Water and Sanitary Sewer Service shall be provided by Charleston Water System. Electrical and Gas Service shall be provided by SCE&G. Police and Fire Protection will be provided by the City of Charleston. Waste management, including recycling services, shall be privately contracted. Due to

the age restriction, it is not anticipated that school age children will be residents of the project. Coordination letters are attached as part of this document.

Section 13 | ADDITIONAL INFORMATION/CRITERIA

Greenway Contribution: Developer shall coordinate with the City of Charleston Planning and Parks Departments and the Charleston Parks Conservancy on the design of the portion of the West Ashley Greenway immediately adjacent to the site. The Developer shall provide final designs for those improvements to the Greenway which shall be completed prior to issuance of building permits for the project and construction of those improvements shall be completed prior to issuance of the final Certificate of Occupancy for the project.

Signage: The project will conform to signage regulations as they pertain to the General Business (GB) zoning classification.

Lighting: Site and building lighting shall be subject to approval through the Technical Review Committee (TRC) process. Glare from site lighting within the project will be less than 50 foot lamberts or one-half of a foot candle when measured at the lot line of adjacent single family residential uses.

Other Regulations: For all regulations not specifically listed herein, the project shall follow provisions found in the City of Charleston Zoning code for General Business (GB).

Section 14 | AMERICANS WITH DISABILITIES ACT

This project will meet all FHA requirements and all public right-of-ways will be ADA Compliant.

LINE TABLE		
LINE	BEARING	LENGTH
L1	S 13°50'14" W	21.26'
L2	S 16°36'59" E	23.90'
L3	S 22°53'47" W	60.64'
L4	S 38°33'25" E	82.10'
L5	S 30°16'20" E	95.59'
L6	S 37°47'22" E	69.44'
L7	S 05°42'05" E	65.93'
L8	S 12°35'17" E	10.79'

NOTES

1. TAX MAP NO.: 349-08-00-001 CURRENT OWNER: ST. ANDREWS PARISH, LLC
2. ACCORDING TO F.I.R.M. MAP NO. 45043C, COMMUNITY No. 455412, PANEL 0513J, REVISED NOVEMBER 17, 2004, THE PROPERTY SHOWN ON THIS PLAT IS LOCATED IN FLOOD HAZARD ZONE AE WITH A BASE FLOOD ELEVATION OF 8 FT. NGVD29 (NGVD29 = NAVD88+0.98)
3. COORDINATES AND DIRECTIONS SHOWN ON THIS SURVEY ARE BASED ON SOUTH CAROLINA STATE PLANE COORDINATE SYSTEM (NAD83). DISTANCES SHOWN ARE GROUND DISTANCES. NOT GRID DISTANCES.
4. ELEVATIONS LISTED ARE BASED ON NAVD88 DATUM AND REFERENCED TO S.C.G.S. STATION ID 049 (PID CJ0470).
5. A TITLE SEARCH WAS NOT PERFORMED BY THOMAS & HUTTON ENGINEERING CO. AT THE TIME OF THIS SURVEY.
6. THE PROPERTY PLATTED HEREON IS SUBJECT TO ALL EASEMENTS AND RESTRICTIONS OF RECORD
7. THE POSITION OF UNDERGROUND UTILITIES SHOWN ON THIS DRAWING IS BASED UPON THE LOCATION OF SURFACE APPURTENANCES AND/OR SURFACE MARKINGS AND SHOULD BE CONSIDERED APPROXIMATE.

VICINITY MAP not to scale

This document and all reproducible copies of this document are the property of Thomas & Hutton. Reproduction of this document is not permitted without written consent of Thomas & Hutton unless this document becomes a matter of public record. ALTERATIONS TO THIS DOCUMENT ARE NOT PERMITTED.

SOUTH CAROLINA THOMAS & HUTTON ENGINEERING CO. No. C00285 CERTIFICATE OF AUTHORIZATION

SOUTH CAROLINA PROFESSIONAL LAND SURVEYOR #10292 F. ELLIOTTE QUINN III

I HEREBY STATE THAT TO THE BEST OF MY PROFESSIONAL KNOWLEDGE, INFORMATION, AND BELIEF, THE SURVEY SHOWN HEREON WAS MADE IN ACCORDANCE WITH THE REQUIREMENTS OF THE STANDARDS OF PRACTICE MANUAL FOR SURVEYING IN SOUTH CAROLINA, AND MEETS OR EXCEEDS THE REQUIREMENTS FOR A CLASS "A" SURVEY AS SPECIFIED THEREIN.

F. ELLIOTTE QUINN III
SOUTH CAROLINA PROFESSIONAL LAND SURVEYOR
LICENSE NO. 10292

TOPOGRAPHIC SURVEY

PARCEL G
CONTAINING 6.15 Ac.
COBURG DAIRY TRACT

ST. ANDREWS PARISH, CITY OF CHARLESTON
CHARLESTON COUNTY, SOUTH CAROLINA

prepared for
GREYSTAR

No	Revision	By	Date

THOMAS & HUTTON
Engineering | Surveying | Planning | GIS | Consulting

682 Johnnie Dodds Boulevard • Suite 100
Mt. Pleasant, SC 29464 • 843.849.0200

www.thomasandhutton.com

40 0 40 80
1 INCH = 40 FEET

plot	drawn	reviewed	field	crew
07/20/16	feq	JP	07/06/16	oba/cnh

job 26205 SHEET 1 OF 1

PROJECT SITE
NOT TO SCALE

NOTE: THIS PLAN IS CONCEPTUAL IN NATURE AND SUBJECT TO CHANGE.

SEAMONWHITESIDE

OVERTURE WEST ASHLEY

Greystar | 18 Broad Street | Suite 300 | Charleston, SC 29401

CITY OF CHARLESTON, SOUTH CAROLINA

22 JULY 2016

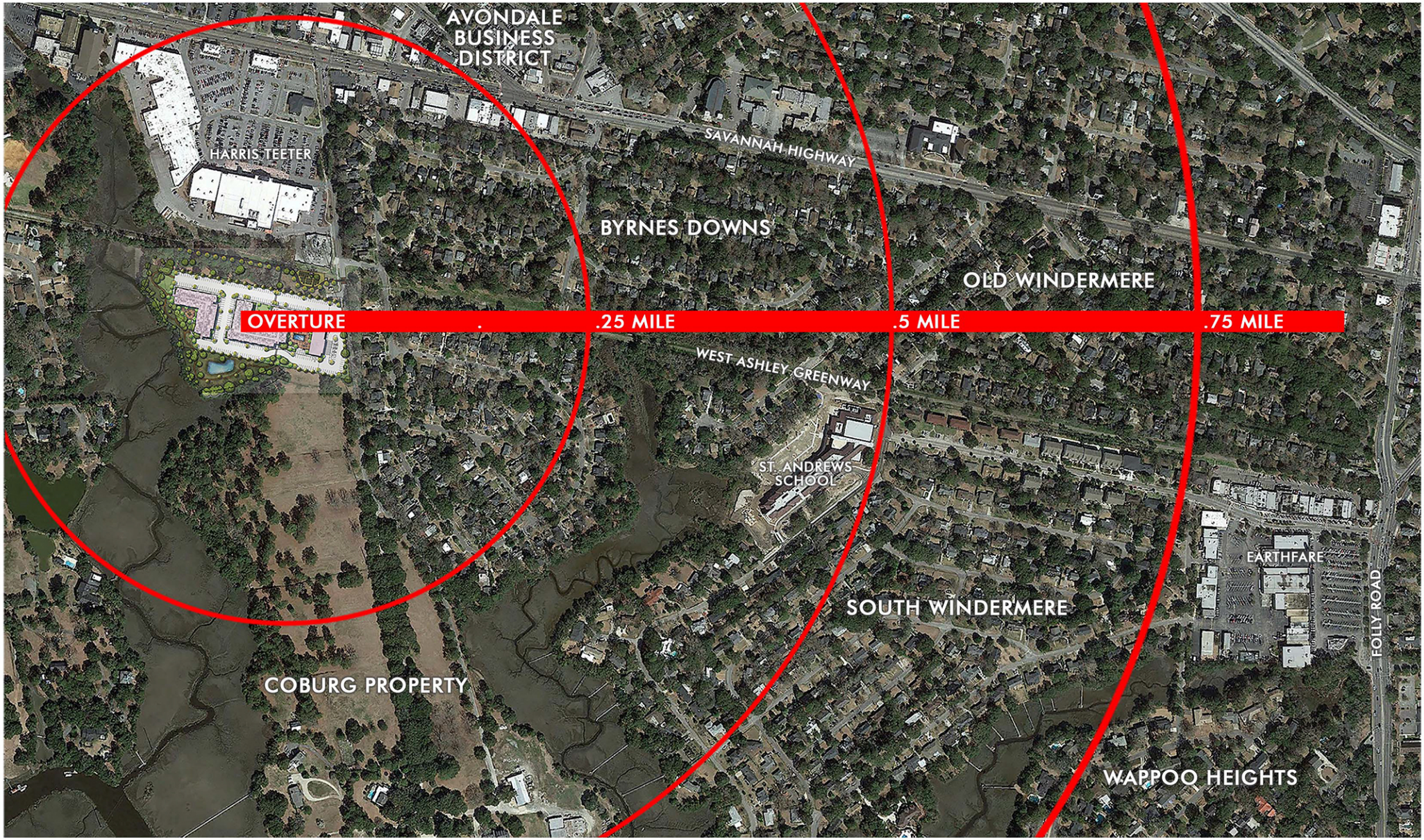

NEIGHBORHOOD MAP
NOT TO SCALE

NOTE: THIS PLAN IS CONCEPTUAL IN NATURE AND SUBJECT TO CHANGE.

SEAMONWHITESIDE

OVERTURE WEST ASHLEY

Greystar | 18 Broad Street | Suite 300 | Charleston, SC 29401
CITY OF CHARLESTON, SOUTH CAROLINA
22 JULY 2016

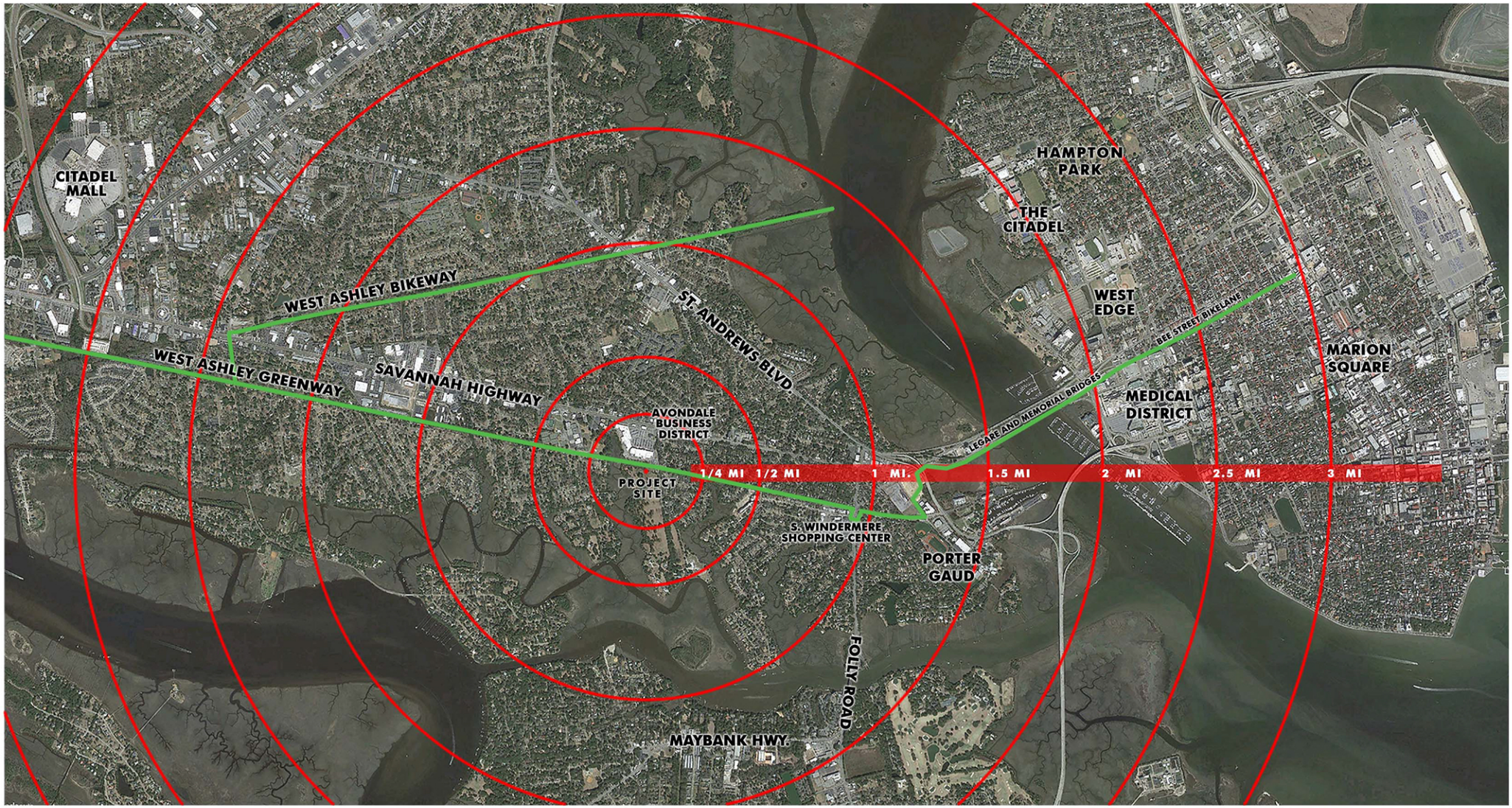

CONTEXT MAP
NOT TO SCALE

NOTE: THIS PLAN IS CONCEPTUAL IN NATURE AND SUBJECT TO CHANGE.

SEAMONWHITESIDE

OVERTURE WEST ASHLEY

Greystar | 18 Broad St., Suite 300 | Charleston, SC 29401

CITY OF CHARLESTON, SOUTH CAROLINA

28 APR 16

OPEN SPACE REQUIREMENTS

TOTAL ACRES: 6.15

REQUIRED OPEN SPACE: 20% OR 1.23 ACRES

PROVIDED OPEN SPACE WITHOUT POOL AREA: 27.7% OR 1.70 ACRES
PROVIDED OPEN SPACE WITH POOL AREA: 31.1% OR 1.91 ACRES

REQUIRED ACTIVE OPEN SPACE: 25% OF TOTAL OR .31 ACRES

ACTIVE OPEN SPACE PROVIDED WITHOUT POOL AREA: 78.8% OR 1.34 ACRES
ACTIVE OPEN SPACE PROVIDED WITH POOL AREA: 81.2% OR 1.55 ACRES

SEAMON WHITESIDE
MOUNT PLEASANT, SC
843.884.1667
GREENVILLE, SC
864.298.0534
WWW.SEAMONWHITESIDE.COM

SOUTH CAROLINA
SEAMON WHITESIDE & ASSOCIATES, INC.
No. C00472
CERTIFICATE OF AUTHORIZATION

OVERTURE COBURG
GREYSTAR GP II, LLC
CITY OF CHARLESTON, SOUTH CAROLINA

SW+ PROJECT:	7265
DATE:	8/29/2016
DRAWN BY:	XXX
CHECKED BY:	XXX

REVISION HISTORY

COPYRIGHT © SEAMON, WHITESIDE & ASSOCIATES, INC. 501 WANDO PARK BOULEVARD, SUITE 200 | MOUNT PLEASANT, SC 29464 | 508 RHETT STREET, SUITE 101 | GREENVILLE, SC 29601 THIS DRAWING SHALL NOT BE REPRODUCED IN ANY MANNER OR USED FOR ANY PURPOSE WITHOUT WRITTEN PERMISSION.

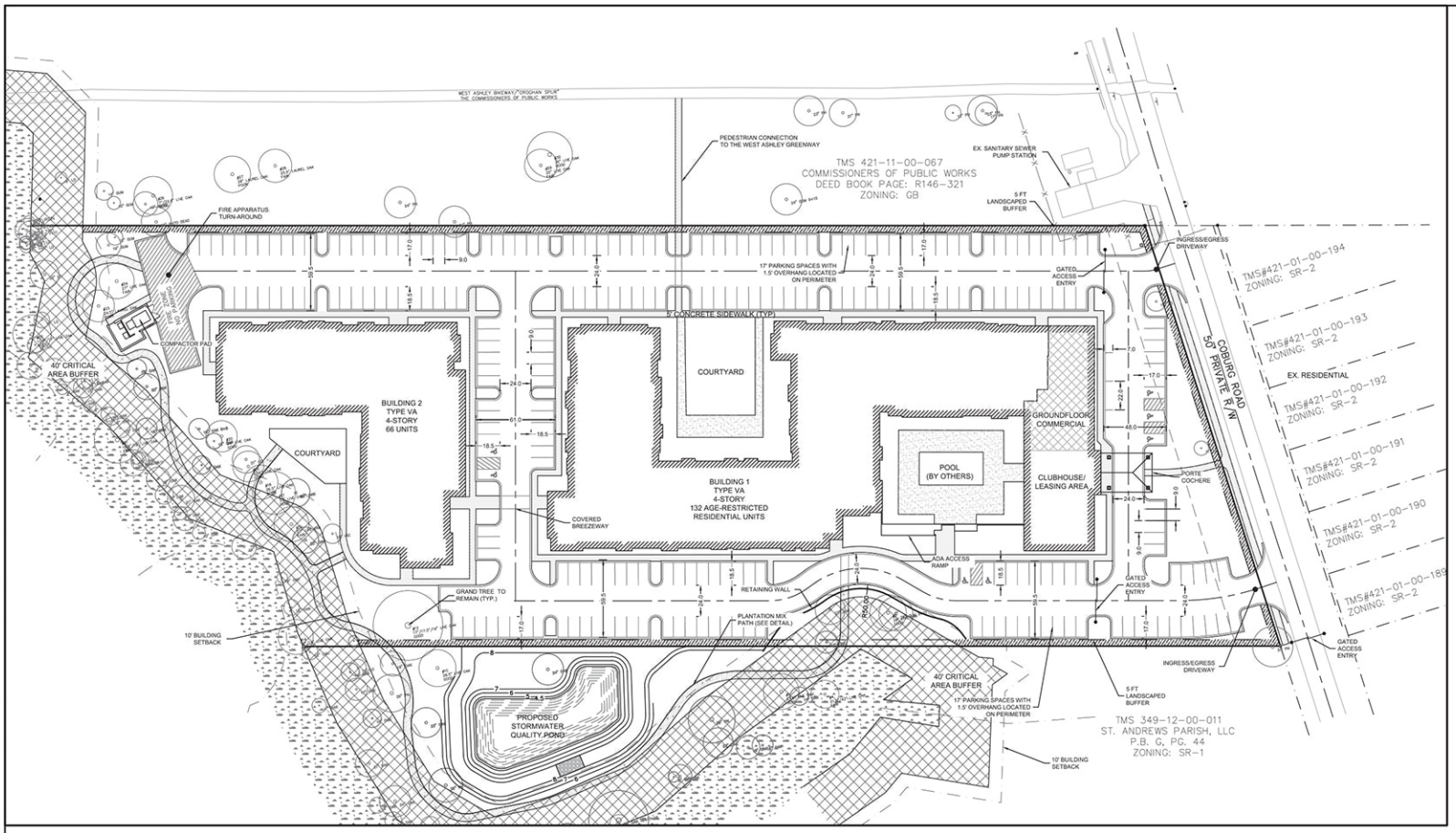

THE PROPERTY IS LOCATED WITHIN FLOOD ZONE AE11 AS SHOWN ON FEMA FIRM PANEL #45019C0513J DATED NOVEMBER 17, 2004. THE PROPOSED OVERTURE COBURG DEVELOPMENT MUST COMPLY WITH APPLICABLE FEMA AND CITY OF CHARLESTON REQUIREMENTS RELATED TO FLOOD ZONES.

ZONING DISTRICT:
THE PARCEL TO BE DEVELOPED IS CURRENTLY ZONED GB (GENERAL BUSINESS) PER THE CITY OF CHARLESTON.

NOTE: THIS PLAN IS CONCEPTUAL IN NATURE AND IS SUBJECT TO CHANGE

SITE DENSITY:
33 DU/AC

ACREAGE CHART	
USE	AREA
OPEN SPACE	+/- 1.91 AC
WETLAND BUFFERS	+/- 0.46 AC
PROPERTY LINE BUFFERS	+/- 0.19 AC
DEVELOPABLE AREA	+/- 3.59 AC
TOTAL	6.15 AC

NOTE: THESE ACREAGES ARE CONCEPTUAL AND SUBJECT TO CHANGE PER P.D. GUIDELINES

DEVELOPMENT CRITERIA	
	MULTI-FAMILY
MIN. FRONT YARD SETBACK	0 Ft
MIN. SIDE YARD SETBACK	0 Ft
MIN. REAR YARD SETBACK	0 Ft
MAX HEIGHT	55 Ft

NOTE: SEE P.D. FOR ADDITIONAL DEVELOPMENT CRITERIA

PARKING CHART					
USE	RATIO	AMOUNT PROPOSED	SPACES REQUIRED	SPACES PROVIDED	PROVIDED RATIO
MULTI-FAMILY	1.2 SPACES PER UNIT	198 UNITS	198 SPACES	255 SPACES	1.28 SPACES PER UNIT

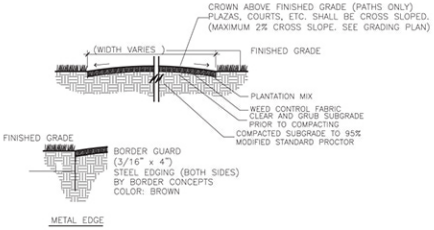

PLANTATION MIX PATH – SECTION
(NOT TO SCALE)

SEAMON WHITESIDE
MOUNT PLEASANT, SC
843.884.1667
GREENVILLE, SC
864.298.0534
WWW.SEAMONWHITESIDE.COM

SEAMON WHITESIDE & ASSOCIATES, INC. No. C00472 CERTIFICATE OF AUTHORIZATION

No. 26145 10/19/16 JASON E. MUNDAY

OVERTURE PLANNED UNIT DEVELOPMENT

GREYSTAR DEVELOPMENT
WEST ASHLEY
CITY OF CHARLESTON, SOUTH CAROLINA

SW+ PROJECT:	7265
DATE:	8/29/2016
DRAWN BY:	RPF
CHECKED BY:	JEM

REVISION HISTORY

LAND USE PLAN

C-3.0

COPYRIGHT © SEAMON, WHITESIDE & ASSOCIATES, INC. 501 WANDO PARK BOULEVARD, SUITE 200 | MOUNT PLEASANT, SC 29464 | 508 RHETT STREET, SUITE 101 | GREENVILLE, SC 29601 THIS DRAWING SHALL NOT BE REPRODUCED IN ANY MANNER OR USED FOR ANY PURPOSE WITHOUT WRITTEN PERMISSION.

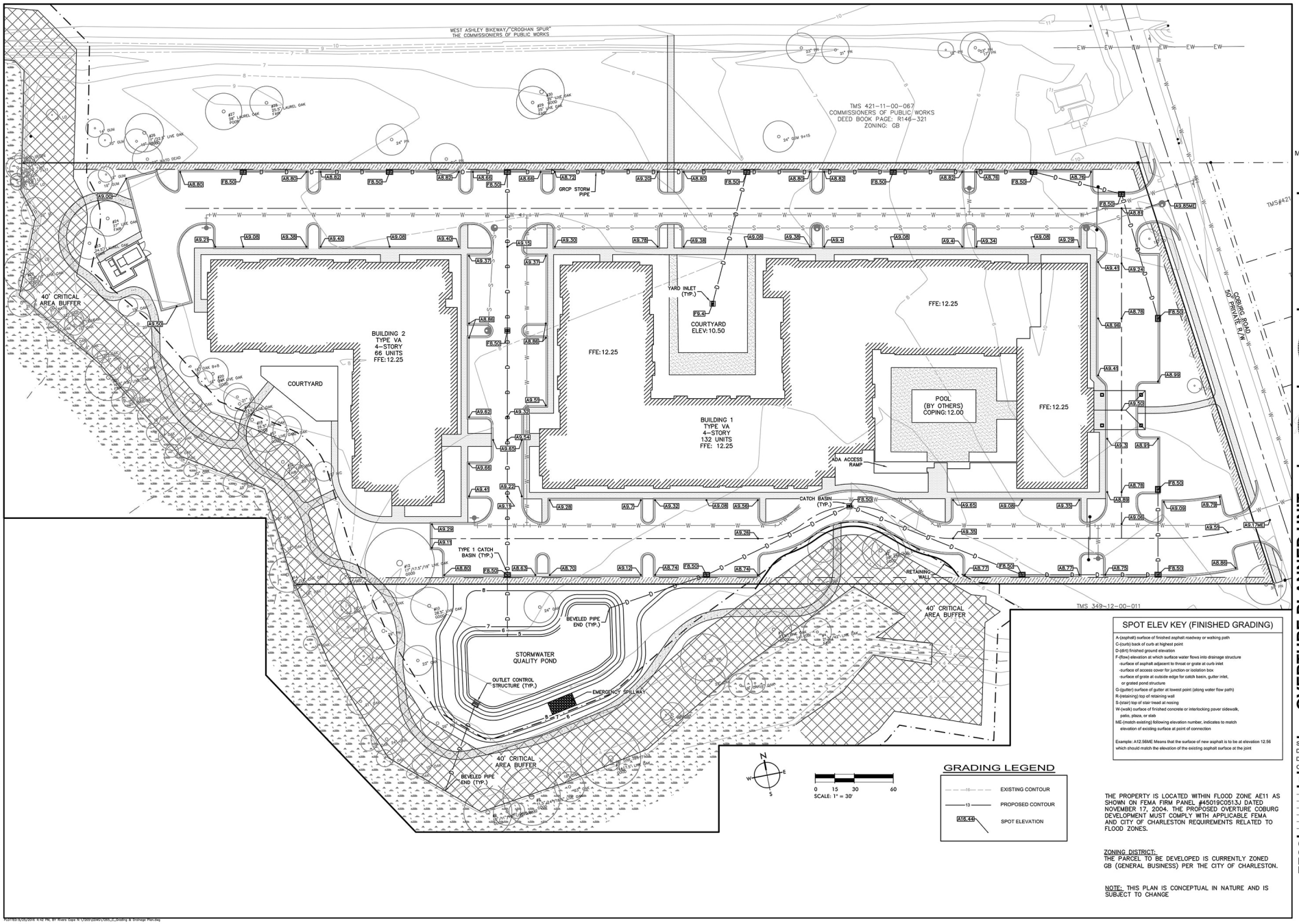

SPOT ELEV KEY (FINISHED GRADING)

A-(asphalt) surface of finished asphalt roadway or walking path
C-(curb) back of curb at highest point
D-(dirt) finished ground elevation
F-(flow) elevation at which surface water flows into drainage structure
-surface of asphalt adjacent to throat or grate at curb inlet
-surface of access cover for junction or isolation box
-surface of grate at outside edge for catch basin, gutter inlet, or grated pond structure
G-(gutter) surface of gutter at lowest point (along water flow path)
R-(retaining) top of retaining wall
S-(stair) top of stair tread at nosing
W-(walk) surface of finished concrete or interlocking paver sidewalk, patio, plaza, or slab
ME-(match existing) following elevation number, indicates to match elevation of existing surface at point of connection

Example: A12.56ME Means that the surface of new asphalt is to be at elevation 12.56 which should match the elevation of the existing asphalt surface at the joint

GRADING LEGEND

16	EXISTING CONTOUR
13	PROPOSED CONTOUR
A15.44	SPOT ELEVATION

THE PROPERTY IS LOCATED WITHIN FLOOD ZONE AE11 AS SHOWN ON FEMA FIRM PANEL #45019C0513J DATED NOVEMBER 17, 2004. THE PROPOSED OVERTURE COBURG DEVELOPMENT MUST COMPLY WITH APPLICABLE FEMA AND CITY OF CHARLESTON REQUIREMENTS RELATED TO FLOOD ZONES.

ZONING DISTRICT:
THE PARCEL TO BE DEVELOPED IS CURRENTLY ZONED GB (GENERAL BUSINESS) PER THE CITY OF CHARLESTON.

NOTE: THIS PLAN IS CONCEPTUAL IN NATURE AND IS SUBJECT TO CHANGE

SEAMON WHITESIDE
MOUNT PLEASANT, SC
843.884.1667
GREENVILLE, SC
864.298.0534
WWW.SEAMONWHITESIDE.COM

SOUTH CAROLINA
SEAMON, WHITESIDE & ASSOCIATES, INC.
No. C00472
CERTIFICATE OF AUTHORIZATION

SOUTH CAROLINA
REGISTERED PROFESSIONAL ENGINEER
No. 26145
8/25/16
JASON E. MINCEY

OVERTURE PLANNED UNIT DEVELOPMENT

GREYSTAR DEVELOPMENT

WEST ASHLEY
CITY OF CHARLESTON, SOUTH CAROLINA

SW+ PROJECT:	7265
DATE:	8/29/2016
DRAWN BY:	RPF
CHECKED BY:	JEM

REVISION HISTORY

CONCEPTUAL GRADING AND DRAINAGE PLAN

C-4.0

COPYRIGHT © SEAMON, WHITESIDE & ASSOCIATES, INC. 501 WANDO PARK BOULEVARD, SUITE 200 | MOUNT PLEASANT, SC 29464 | 508 RHETT STREET, SUITE 101 | GREENVILLE, SC 29601 THIS DRAWING SHALL NOT BE REPRODUCED IN ANY MANNER OR USED FOR ANY PURPOSE WITHOUT WRITTEN PERMISSION.

PLOTTED:8/25/2016 4:42 PM, BY: Rivera Gaye N:\2015\205401\7265_C_Grading & Drainage Plan.dwg

Charleston Water System

PO Box B
Charleston, SC 29402
103 St. Philip Street (29403)

(843) 727-6800
www.charlestonwater.com

Board of Commissioners
Thomas B. Pritchard, Chairman
David E. Rivers, Vice Chairman
William E. Koopman, Jr., Commissioner
Mayor John J. Tecklenburg (Ex-Officio)
Councilmember Perry K. Waring (Ex-Officio)

Officers
Kin Hill, P.E., Chief Executive Officer
Dorothy Harrison, Chief Administrative Officer
Wesley Ropp, CMA, Chief Financial Officer
Andy Fairey, Chief Operating Officer
Mark Cline, P.E., Capital Projects Officer

8/4/2016

Ms. Kellie Tillman
Seamon, Whiteside & Associates, Inc.
501 Wando Park Boulevard, Ste 200
Mount Pleasant, SC 29464

Re: Sewer Availability to TMS #349-08-00-001 to serve 11,000sf of mixed use commercial & 198 multi family residential units

Dear Ms. Tillman,

This letter is to certify our willingness and ability to provide wastewater collection to the above referenced site in Charleston County, South Carolina. Wastewater collection to this site may be made available via the existing 12" gravity main in the right of way of Coburg Rd. Any subdividing of the property subsequent to this correspondence will require a review process of the civil engineering plans to ensure compliance with the Charleston Water System minimum standards. Any extensions and/or modifications to the infrastructure to serve this site will be a developer expense. Please be advised that wastewater impact fees, wastewater tap fees, change-in-use fees, and/or cost to extend fees will be due prior to connection of any Charleston Water System's sewer system. This letter does not reserve capacity in the Charleston Water System infrastructure and it is incumbent upon the developer or his agent to confirm the availability herein granted past 12 months of this correspondence.

The Charleston Water System certifies the availability of service only insofar as its rights allow. Should access to our existing sewer main/mains be denied by appropriate governing authorities, the Charleston Water System will have no other option than to deny service.

This letter is not to be construed as a letter of acceptance for operation and maintenance from the Department of Health and Environmental Control.

If there are any questions pertaining to this letter, please do not hesitate to call on me at (843) 727-6870.

Sincerely,

Cheryl L. Boyle
Engineering Assistant
Charleston Water System

cc: file

This is an "uncontrolled" copy of a controlled document.

Charleston Water System

Sewer System

Legend

- Manhole
- Valve
- Pump Station
- Force Main
- Gravity Main
- Tunnel
- County Parcel
- Street Centerline
- Abandoned Main

Charleston Water System acquires, develops, maintains and uses GIS datasets in support of its internal business functions and public services. All GIS datasets are provided 'as is' with no warranty. It is your responsibility to verify all information derived from the GIS data before making decisions or taking actions based on the information.

1 inch = 250 feet

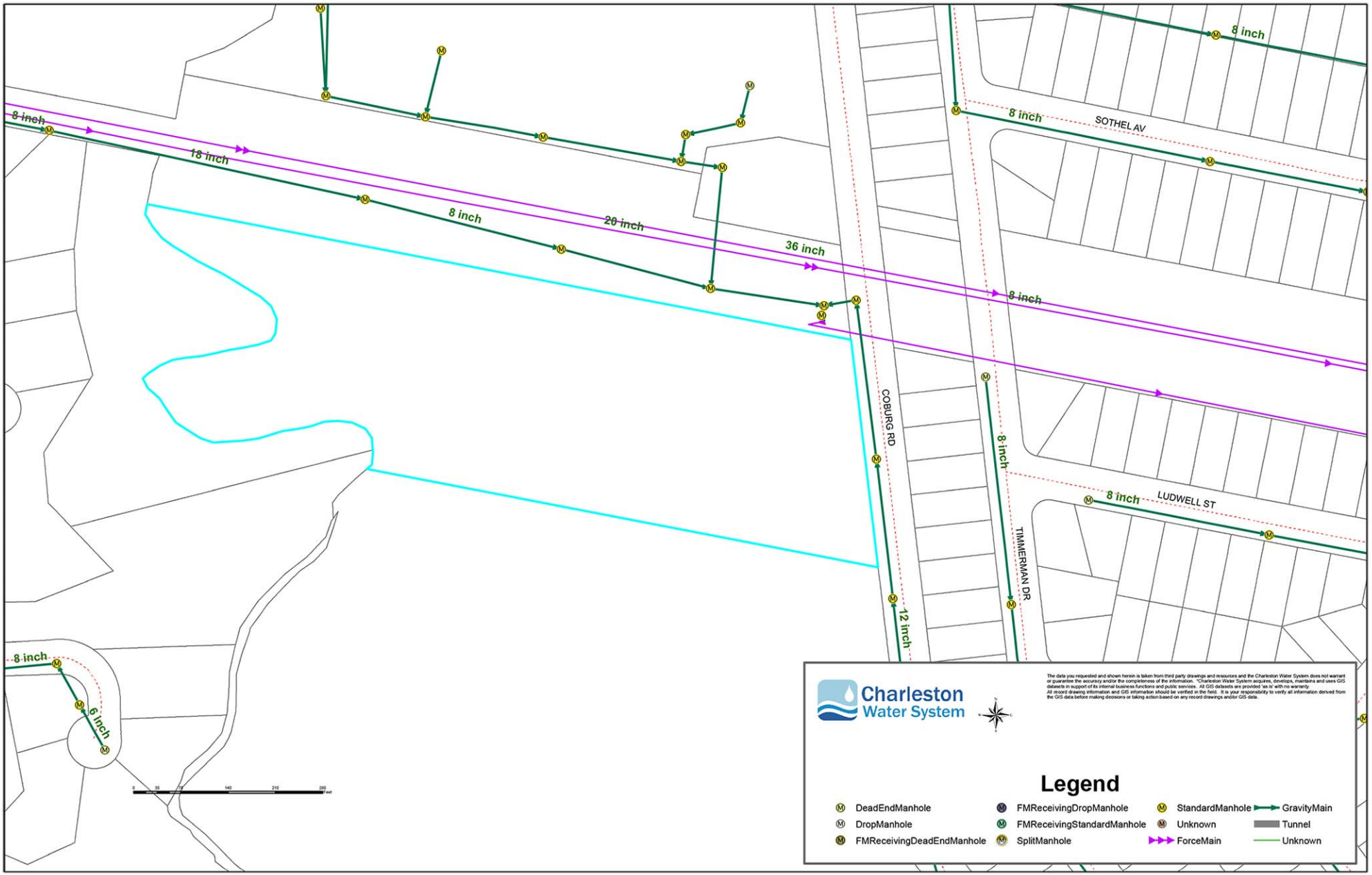
8 inch
18 inch
8 inch
20 inch
36 inch
8 inch
8 inch
SOTHEL AV
COBURG RD
8 inch
TIMMERMAN DR
8 inch
LUDWELL ST
12 inch
8 inch
6 inch
Charleston Water System
The data you requested and shown herein is taken from third party drawings and resources and the Charleston Water System does not warrant or guarantee the accuracy and/or the completeness of the information. "Charleston Water System acquires, develops, maintains and uses GIS datasets in support of its internal business functions and public services. All GIS datasets are provided 'as is' with no warranty.
All record drawing information and GIS information should be verified in the field. It is your responsibility to verify all information derived from the GIS data before making decisions or taking action based on any record drawings and/or GIS data.
Legend
DeadEndManhole
DropManhole
FMReceivingDeadEndManhole
FMReceivingDropManhole
FMReceivingStandardManhole
SplitManhole
StandardManhole
Unknown
ForceMain
GravityMain
Tunnel
Unknown

Charleston Water System

PO Box B
Charleston, SC 29402
103 St. Philip Street (29403)

(843) 727-6800
www.charlestonwater.com

Board of Commissioners
Thomas B. Pritchard, Chairman
David E. Rivers, Vice Chairman
William E. Koopman, Jr., Commissioner
Mayor John J. Tecklenburg (Ex-Officio)
Councilmember Perry K. Waring (Ex-Officio)

Officers
Kin Hill, P.E., Chief Executive Officer
Dorothy Harrison, Chief Administrative Officer
Wesley Ropp, CMA, Chief Financial Officer
Andy Fairey, Chief Operating Officer
Mark Cline, P.E., Capital Projects Officer

7/29/2016

Ms. Kellie Tillman
Seamon, Whiteside & Associates, Inc.
501 Wando Park Boulevard, Ste 200
Mount Pleasant, SC 29464

Re: Water Availability to TMS #349-08-00-001 to serve 11,000sf of mixed use commercial & 198 multi family residential units

Dear Ms. Tillman,

This letter is to certify our willingness and ability to provide water to the above referenced site in Charleston County, South Carolina. We currently have a 16" water main in the right-of-way of Coburg Rd. that your property may be served from. Please be advised that the proposed development cannot adversely affect the existing downstream customers. This review does not supplant any other review as required by governing authorities and municipalities. It will of course be a developer responsibility to ensure there are adequate pressures and quantities on this line to serve this site with domestic water/fire flow and not negatively impact the existing developments. Please be advised any extensions or modification to the infrastructure as well as any additional fire protection will be a developer expense. All fees and costs associated with providing water service to this site will be a developer expense. This letter does not reserve capacity in the Charleston Water System infrastructure and it is incumbent upon the developer or his agent to confirm the availability herein granted past 12 months of this correspondence.

The Charleston Water System certifies the availability of service only insofar as its rights allow. Should access to our existing main/mains be denied by appropriate governing authorities, the Charleston Water System will have no other option than to deny service.

This letter is not to be construed as a letter of acceptance for operation and maintenance from the Department of Health and Environmental Control.

If there are any questions pertaining to this letter, please do not hesitate to call on me at (843) 727-6870.

Sincerely,

Cheryl L. Boyle
Engineering Assistant
Charleston Water System

cc: file

This is an "uncontrolled" copy of a controlled document.

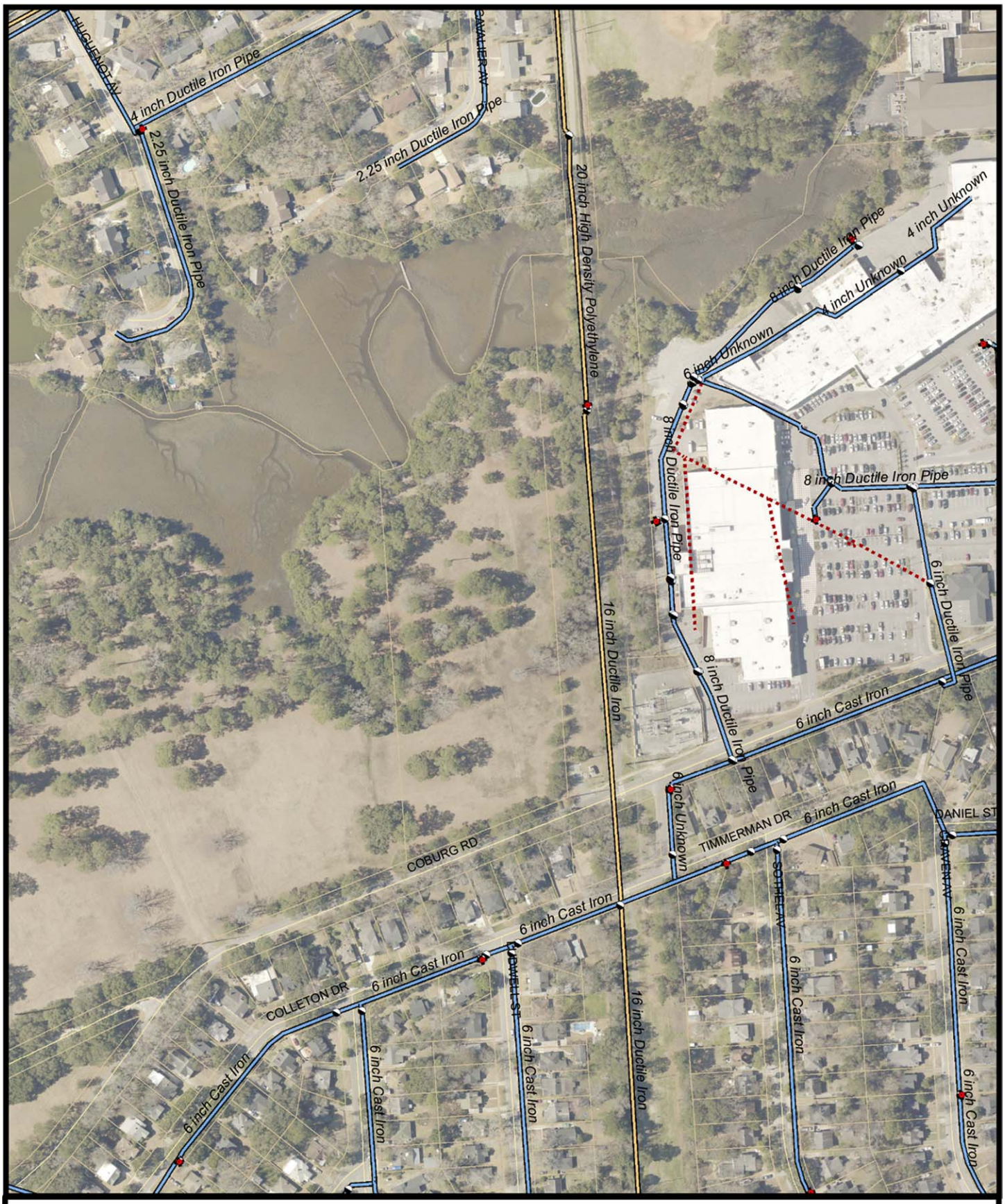

Charleston Water System

Water System

Legend

- Hydrant
- Valve
- Hydrant Lead
- Abandoned Main
- Distribution Main
- Transmission Main
- County Parcel
- Street Centerline
- Tunnel

Charleston Water System acquires, develops, maintains and uses GIS datasets in support of its internal business functions and public services. All GIS datasets are provided 'as is' with no warranty. It is your responsibility to verify all information derived from the GIS data before making decisions or taking actions based on the information.

1 inch = 250 feet

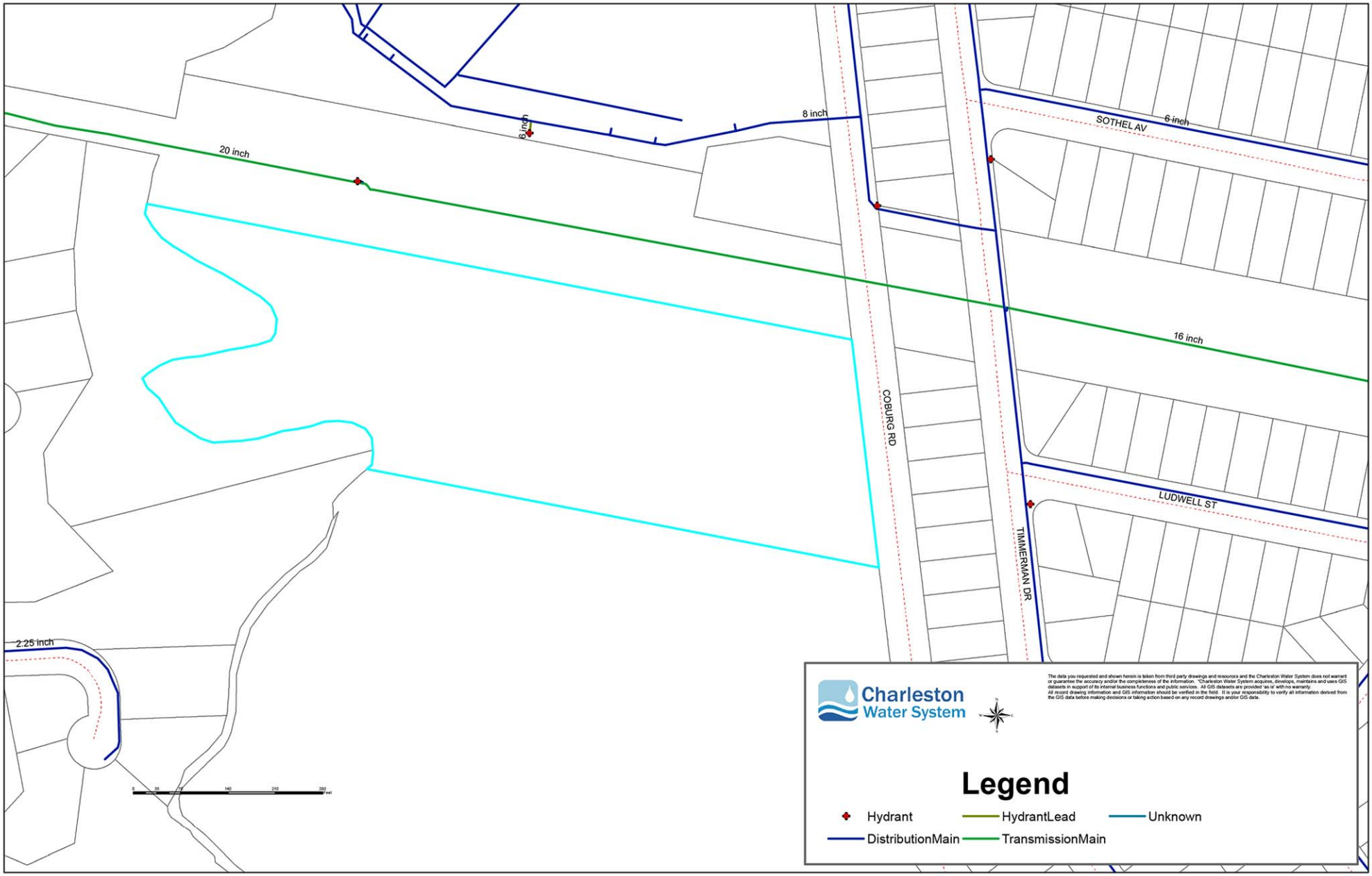
20 inch
8 inch
8 inch
6 inch
SOTHEL AV
16 inch
COBURG RD
TIMMERMAN DR
LUDWELL ST
2.25 inch
Charleston
Water System
The data you requested and shown herein is taken from third party drawings and resources and the Charleston Water System does not warrant or guarantee the accuracy and/or the completeness of the information. "Charleston Water System acquires, develops, maintains and uses GIS datasets in support of its internal business functions and public services. All GIS datasets are provided 'as is' with no warranty.
All record drawing information and GIS information should be verified in the field. It is your responsibility to verify all information derived from the GIS data before making decisions or taking action based on any record drawings and/or GIS data.
Legend
Hydrant
HydrantLead
Unknown
DistributionMain
TransmissionMain

July 21, 2016

Kellie Tillman
Seamon Whiteside & Asssociates
501 Wando Park Blvd., Ste. 200
Mt. Pleasant, SC 29464

Re: TMS # 349-08-00-001 located in Charleston County, SC 29407

Dear Ms. Tillman:

This letter will verify that South Carolina Electric and Gas Company has sufficient electric capacity to serve the referenced tract above. Electric service will be provided in accordance with SCE&G's General Terms and Conditions, other documents on file with the South Carolina Public Service Commission, and the Company's standard operating policies and procedures.

Please contact me at 843-576-8447 if you have any questions or if I may be of assistance.

Sincerely,

Steven M. Morillo
Customer Service Engineering

BELLSOUTH

BellSouth Telecommunications, Inc.
2600 Meeting Street Road
Charleston, SC 29405-8307

July 22, 2016

Kellie Tillman
501 Wando Park Blvd., Ste. 200
Mt. Pleasant, SC 29464

Re: Service Availability for Telephone

To: Kellie Tillman

This is to confirm that AT&T will be able to provide telephone service to the property of and around Charleston County Tax Map #349-08-00-001 in the West Ashley area. The property will be for mixed retail and approx. 198 multi-family units. Service is contingent upon our receiving detailed plans of the development with utility easements granted, proper lead-time to install these services (16 months), and the correct 911 street addresses. One 10'x10' easements would have to be provided to AT&T for equipment (if needed). This tract of land would be served with fiber cable to provide TV, Internet, and phone services to the multi-family units and copper to the retail. The placement of the fiber/copper cable would be at no cost to the land owner. The cost of the 30" insert boxes would be at owners' expense but there is another option to do without boxes. Plans should be submitted to Alan Squires (tel.# 843-522-4067) at the following address 3246 Fortune Drive North Charleston, SC 29418-3422 or email to js0590@att.com CAD files need to be sent in 04 version. Build time is about 10 to 12 months in most cases for orders to flow in all systems.

Should you have any questions or concerns, please contact me.

Sincerely,

Alan Squires

Alan Squires
Designer-AT&T

XFINITY Communities™

July 26, 2016

RE: TMS Parcels 349-08-00-001

To Whom It May Concern:

This letter is to confirm that Comcast Cable is the franchised video service provider for the new location off in Charleston, SC 29407 including up to 199 multifamily units. Upon execution of a property-specific agreement, the terms of which will be negotiated separately, Comcast can and will extend its fiber rich cable plant to the property so that the residents there will have access to Xfinity Video, High-Speed Data, and Digital Voice services including eventually 1Gbps internet speeds.

Depending on cost to extend the plant, the owner may be asked to bear some of the cost of cable plant construction.

Should you have any additional questions, please contact me at 843-266-3094.

Best Regards,

Andy Mcilwain
Account Executive
Comcast of South Carolina, Inc.
4400 Bell Oaks Drive
North Charleston, SC 29405
(843) 266-3094 office
Andrews_mcilwain@cable.comcast.com

Memorandum

To: Michael Mathis, City of Charleston, Traffic and Transportation Department

From: Jennifer T. Bihl, PE, PTOE

Date: December 13, 2016

Subject: Overture West Ashley - Sensitivity Analysis for Byrnes Downs

The proposed Overture West Ashley development will consist of 198 PUD-restricted senior adult attached housing units on Coburg Road and has a projected a buildout year of 2018. A traffic impact analysis, *Overture West Ashley* (dated August 2016), reviewed the potential impacts of the proposed development on the surrounding roadway network. A sign prohibiting right turns is planned to be added for vehicles exiting the development on the northbound approach of the intersection of Coburg Road at No Name Road. Although it is not anticipated that site traffic will utilize the Byrnes Down community (as reflected in the TIA), a sensitivity analysis was performed to review potential traffic related impacts the proposed development would have if the site traffic were to travel through the community.

Study Area

The sensitivity analysis study area includes the following intersections:

- Coburg Road at Savannah Highway
- No Name Road at Coburg Road
- No Name Road at Timmerman Drive
- Nicholson Street at Sothel Avenue/Lyttleton Street
- Yeadon Avenue at Campbell Drive

Figure 1 (attached) shows the site location and **Figure 2** (attached) shows the conceptual site plan.

Existing Conditions

Roadways in the project vicinity include US 17 (Savannah Highway), Coburg Road, No Name Road, Timmerman Drive, Nicholson Street, Sothel Avenue, Lyttleton Street, Yeadon Avenue, and Campbell Drive.

US 17 (Savannah Highway) is a four-lane roadway with a two-way left-turn lane and a speed limit of 35 mph near Coburg Road. Based on 2015 South Carolina Department of Transportation (SCDOT) average annual daily traffic volumes (AADT), US 17 (Savannah Highway) carries 40,800 vehicles per day (vpd) in the vicinity of the project.

Coburg Road is a two-lane roadway that provides access to the St. Andrews shopping center and residential uses. The West Ashley Greenway crosses Coburg Road between the St. Andrews shopping center and the site.

No Name Road is a two-lane roadway that runs east/west between Coburg Road and Timmerman Road.

Timmerman Drive is a two-lane roadway with a posted speed limit of 25 mph. It serves primarily residential users.

Nicholson Street is a two-lane roadway serving primarily residential users and a local fire station near its intersection with US 17.

Sothel Avenue is an east/west roadway that runs between Timmerman Drive and Nicholson Street. It is a two-lane roadway with a posted speed limit of 25 mph and serves primarily residential users.

Lyttleton Street is an east/west roadway at its intersection with Nicholson Street and then becomes a north/south roadway at its intersection with Yeadon Avenue. Lyttleton Street is a two-lane roadway with a posted speed limit of 20 mph and serves primarily residential users.

Yeadon Avenue is a two-lane roadway that runs east/west between Nicholson Street and Campbell Drive. It serves primarily residential users.

Campbell Drive is a two-lane roadway with a posted speed limit of 20 mph and serves primarily residential users.

Trip Generation

The traffic generation potential of the proposed development was determined using trip generation information published in *Institute of Transportation Engineers' (ITE) Trip Generation, Ninth Edition.*

Table 1 provides trip generation information for the site.

Table 1:
Trip Generation

Land Use and Intensity	ITE Land Use Code	Daily Total	AM Peak Hour			PM Peak Hour		
			Total	In	Out	Total	In	Out
198 Senior Housing Units	252	681	39	13	26	49	26	23
New Trips			**39**	**13**	**26**	**49**	**26**	**23**

The proposed development is projected to generate 39 new trips during the AM peak hour (13 entering and 26 exiting) and 49 new trips during the PM peak hour (26 entering and 23 exiting).

Trip Distribution and Assignment

In the original traffic impact analysis, all of the site traffic was assigned to the intersection of Savannah Highway and Coburg Road with a directional split of 50% to/from the east and 50% to/from the west. As part of the sensitivity analysis, a portion of the site traffic was reassigned to travel through the Byrnes Down community to test potential impacts with the following distribution applied:

- 50% to/from the west on Savannah Highway via Coburg Road
- 40% from the east on Savannah Highway via Coburg Road
- 10% from the east via Byrnes Down
- 25% to the east via Byrnes Down
- 25% to the east on Savannah Highway via Coburg Road

Figure 3 (attached) shows the trip distribution for the project.

Existing Traffic

Peak hour intersection turning movement counts including vehicular, pedestrian, and heavy vehicle traffic were performed in April and November 2016 from 7:00 AM to 9:00 AM and from 2:00 PM to 6:00 PM at the study area intersections (note that Savanah Highway at Coburg Road was counted from 4:00 to 6:00 PM as part of the original study).

The turning movement count data is included in the Appendix and the AM and PM peak hour existing traffic volumes are shown in **Figure 4** (attached).

The AM and PM peak hours for each study area intersections are listed below:

- Coburg Road at Savannah Highway: 7:30 AM to 8:30 AM, 4:15 PM to 5:15 PM
- No Name Road at Coburg Road: 7:15 AM to 8:15 AM, 4:00 PM to 5:00 PM
- No Name Road at Timmerman Drive: 7:15 AM to 8:15 AM, 4:00 PM to 5:00 PM
- Nicholson Street at Sothel Avenue/Lyttleton Street: 7:45 AM to 8:45 AM, 4:45 PM to 5:45 PM
- Yeadon Avenue at Campbell Drive: 7:45 AM to 8:45 AM, 3:00 PM to 4:00 PM

The two-way AM and PM peak hour volumes for study area roadways in Byrnes Down area are summarized in **Table 2**.

Table 2: Existing Two-way Peak Hour Volumes		
Roadway	**AM Peak Hour (vehicles per hour)**	**PM Peak Hour (vehicles per hour)**
No Name Road	56	90
Sothel Avenue	84	114
Yeadon Avenue	308	127
Campbell Drive (north of Yeadon Avenue)	116	118
Campbell Drive (south of Yeadon Avenue)*	352	211

* Influenced by school traffic

Background Growth

Historic growth is defined as the increase in existing traffic volumes due to usage increases and non-specific growth throughout the area. A 2.0% per year growth rate was used for this analysis. Background traffic volumes include existing traffic grown to the buildout year. This growth rate is consistent with the previous analysis performed in the traffic impact analysis.

Future Traffic

The 2018 total traffic volumes include the 2018 No Build traffic and the proposed development traffic at buildout. The 2018 AM and PM peak hour total traffic volumes are shown in **Figure 5** (attached) and **Figure 6** (attached), respectively.

Capacity Analysis Review

Capacity analyses were performed for the AM and PM peak hours for the Existing, 2018 No Build, and 2018 Build conditions using the Synchro Version 9 software to determine the operating characteristics of the adjacent roadway network and the impacts of the proposed project. The analyses were conducted with methodologies contained in the *2010 Highway Capacity Manual* (Transportation Research Board, December 2010).

Capacity analyses were performed for the Existing, 2018 No Build, and 2018 Build AM and PM peak hour traffic conditions for the following intersections:

- Coburg Road at Savannah Highway
- No Name Road at Coburg Road
- No Name Road at Timmerman Drive
- Nicholson Street at Sothel Avenue/Lyttleton Street
- Yeadon Avenue at Campbell Drive

Table 3 summarizes LOS and control delay (average seconds of delay per vehicle) for the projected Existing, 2018 No Build, and 2018 Build AM and PM peak hour conditions at the study area intersections.

Table 3:
Level of Service and delay (average seconds per vehicle)

Intersection	Traffic Control[1]	Existing Conditions		2018 No Build Conditions		2018 Build Conditions	
		AM Peak Hour	PM Peak Hour	AM Peak Hour	PM Peak Hour	AM Peak Hour	PM Peak Hour
US 17 (Savannah Hwy.) at Coburg Rd.	S	B (12.5)	B (18.5)	B (13.3)	B (19.5)	B (14.4)	C (20.5)
No Name Rd. at Coburg Rd.	U	A (8.5) – WB	A (8.6) – WB	A (8.5) – WB	A (8.6) – WB	A (8.9) – WB	A (8.8) – WB
No Name Rd. at Timmerman Dr.	U	A (8.6) – EB	A (9.1) – EB	A (8.6) – EB	A (9.1) – EB	A (8.8) – EB	A (9.2) – EB
Nicholson St. at Sothel Ave./Lyttleton St.	U	A (9.7) – WB	B (10.2) – EB	A (9.7) – WB	B (10.3) – EB	A (9.7) – WB	B (10.5) – EB
Yeadon Ave. at Campbell Dr.	U	A (9.0)	A (8.2)	A (9.2)	A (8.3)	A (9.2)	A (8.3)

Based on the Existing conditions analysis, the study area intersections are operating acceptably during the AM and PM peak hour conditions. During peak times, traffic on US 17 (Savannah Highway) experiences congestion. The City is in the process of updating the signal timings to improve flow along the corridor. The study area intersections in Byrnes Down currently operate at LOS A in the AM peak hour or LOS B or better in the PM peak hour.

2018 No Build analysis shows the study area intersections continuing to operate at LOS B or better in the AM and PM peak hour conditions. 2018 Build sensitivity analysis shows the study area intersections experiencing minor increases in delay with the addition of site traffic. In the sensitivity analysis conditions, the Byrnes Down intersections are projected to operate at LOS B or better.

Summary

In summary, based 2018 Build sensitivity analysis for the neighborhood roadways, the proposed development is not expected to have a significant impact on the study area. No significant impact is expected from this development on the roadways internal to the Byrnes Down community and the study area intersections are shown to operate acceptably and similar to Existing conditions with site traffic from the sensitivity analysis taken into consideration. Also, as stated previously, a no right turn sign is planned on the northbound approach of the intersection of Coburg Road at No Name Road prohibiting right turns.

BIHL ENGINEERING	**Overture West Ashley Sensitivity Traffic Impact Analysis**	**Site Location**	**Figure 1**

Source: Seamon Whiteside

Figure 2: Conceptual Site Plan

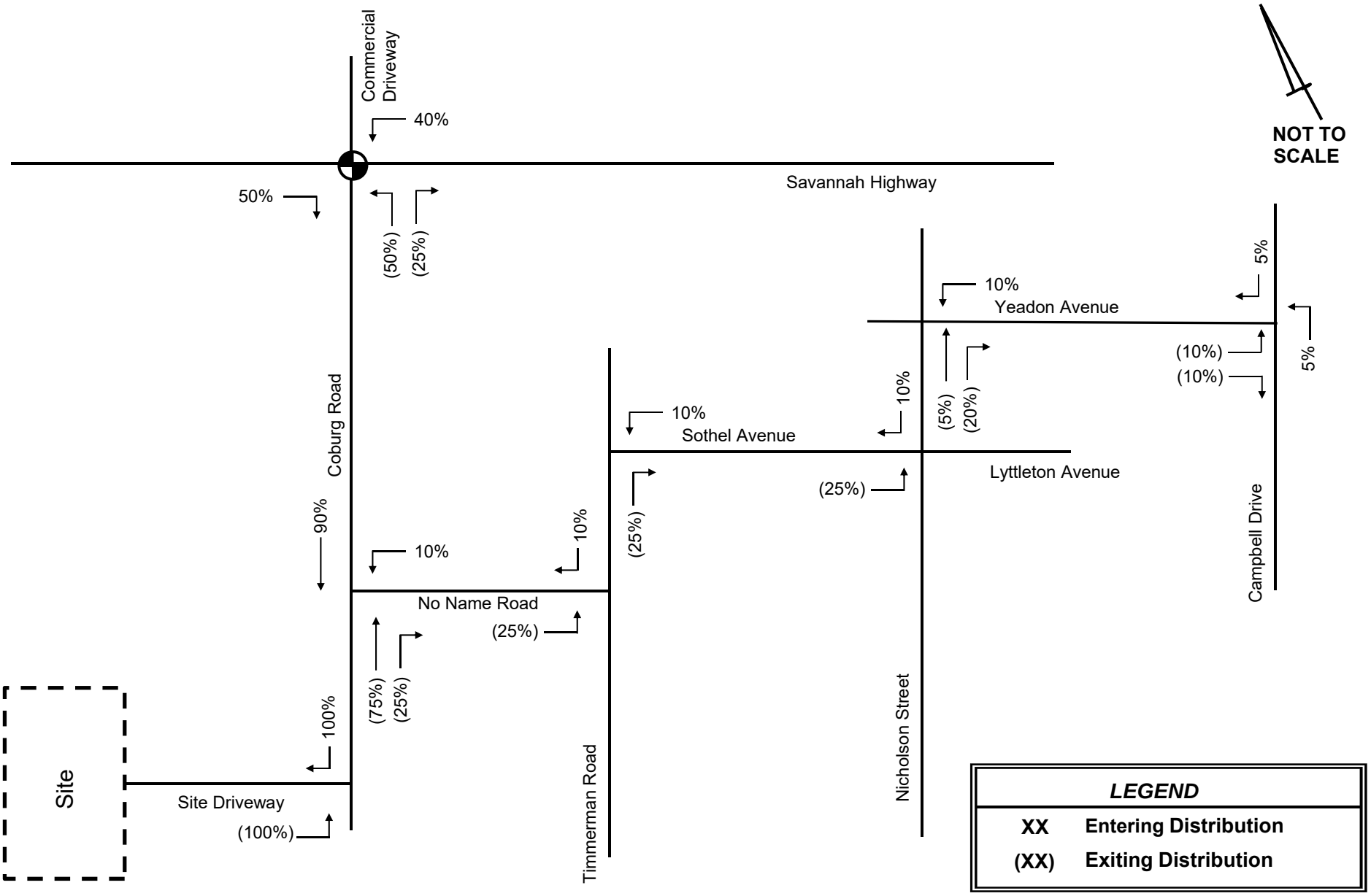

BIHL ENGINEERING

Overture West Ashley Sensitivity Traffic Impact Analysis

Trip Distribution

Figure 3

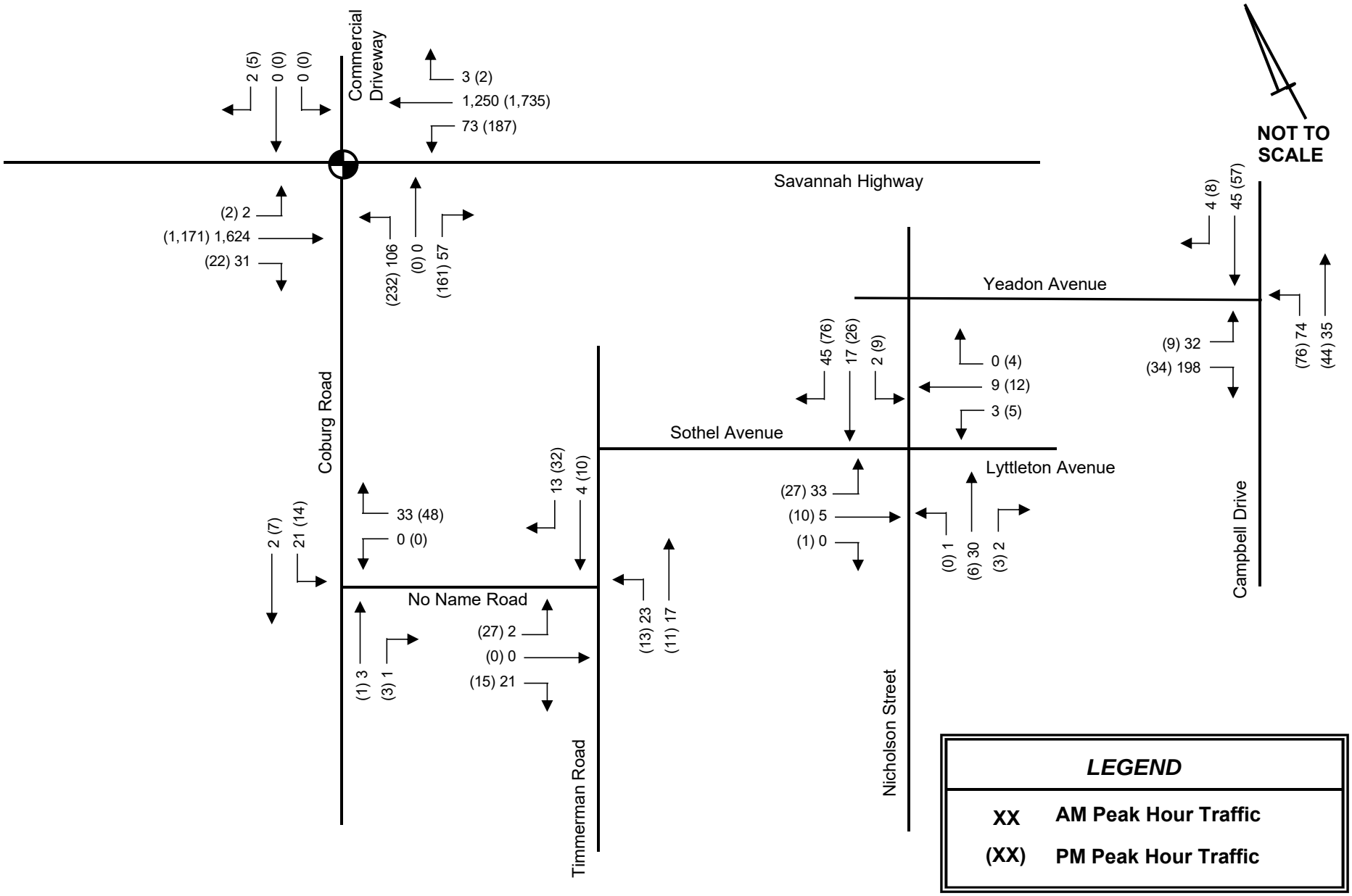

BIHL ENGINEERING

Overture West Ashley Sensitivity Traffic Impact Analysis

Existing Traffic Volumes

Figure 4

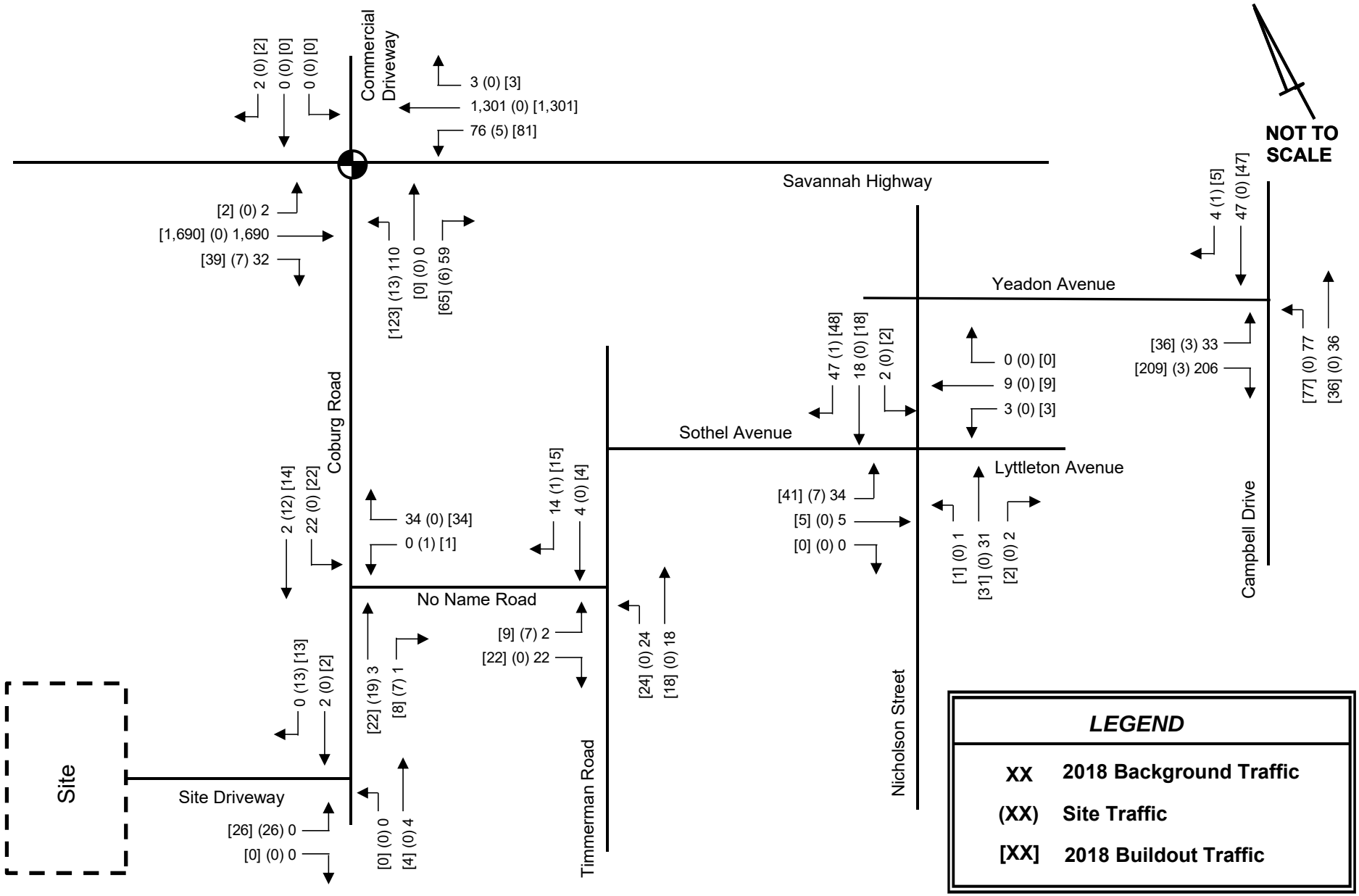

BIHL ENGINEERING

Overture West Ashley Sensitivity Traffic Impact Analysis

2018 AM Peak Traffic Volumes

Figure 5

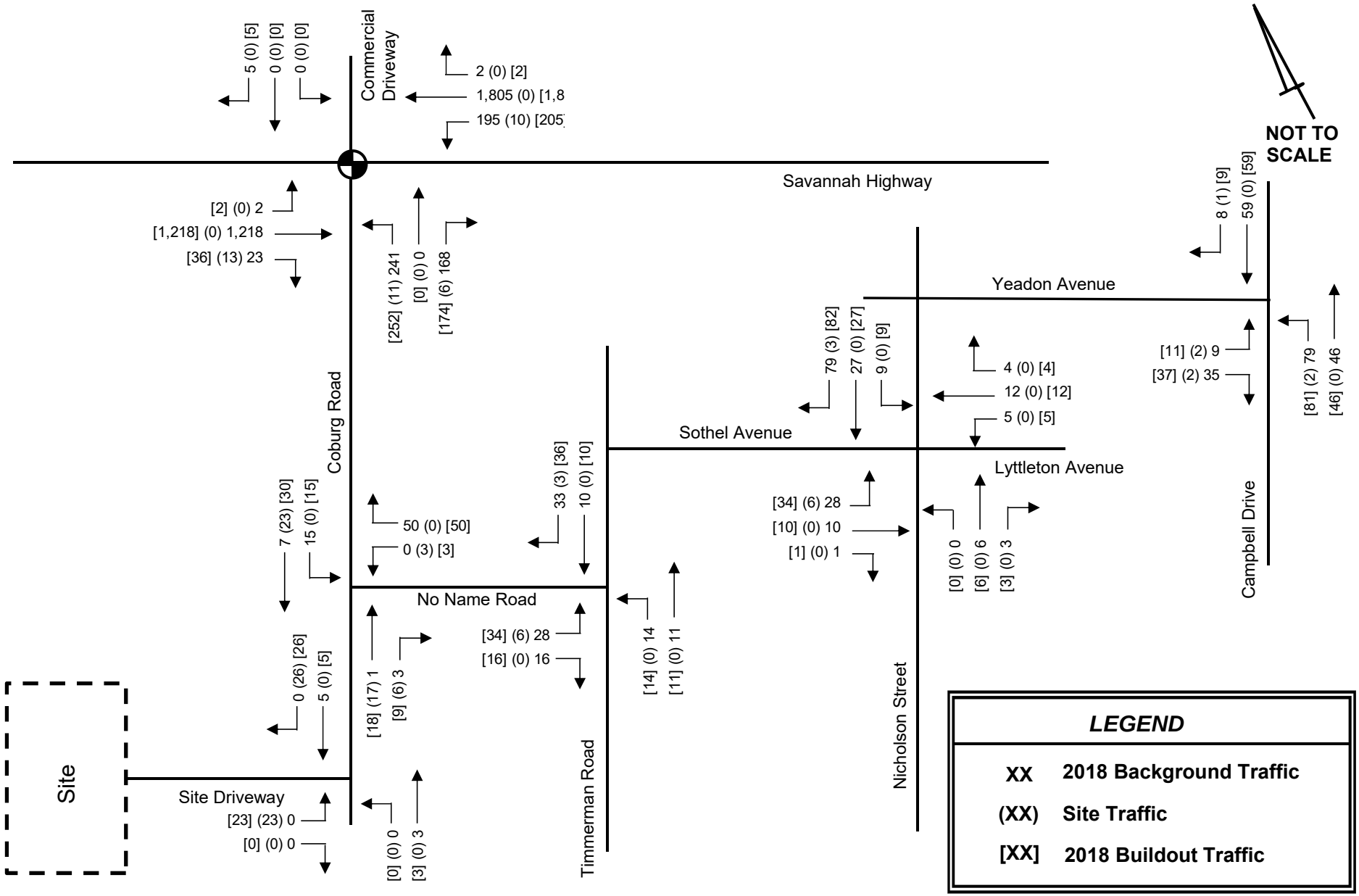

BIHL ENGINEERING

Overture West Ashley Sensitivity Traffic Impact Analysis

2018 PM Peak Traffic Volumes

Figure 6

All Traffic Data Services Inc.

(303) 216-2439
www.alltrafficdata.net

Location: #28 COBURG AVENUE & HWY. 17 AM
Date and Start Time: Tuesday, April 19, 2016
Peak Hour: 07:30 AM - 08:30 AM
Peak 15-Minutes: 08:00 AM - 08:15 AM

Peak Hour - All Vehicles

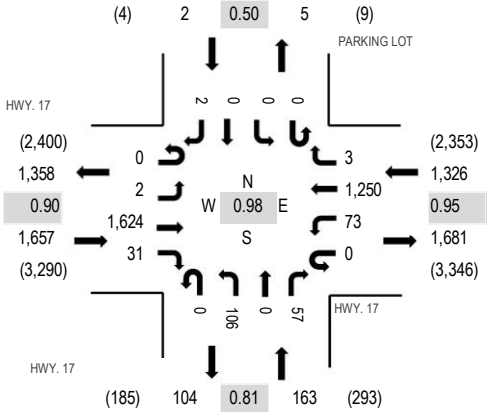

Note: Total study counts contained in parentheses.

Peak Hour - Pedestrians/Bicycles in Crosswalk

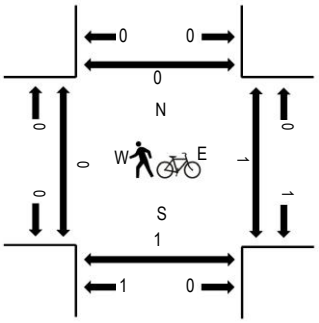

Traffic Counts

Interval Start Time	HWY. 17 Eastbound				HWY. 17 Westbound				COBURG AVENUE Northbound				PARKING LOT Southbound				Total	Rolling Hour	Pedestrain Crossings			
	U-Turn	Left	Thru	Right	U-Turn	Left	Thru	Right	U-Turn	Left	Thru	Right	U-Turn	Left	Thru	Right			West	East	South	North
7:00 AM	0	1	401	3	0	11	210	0	0	10	0	10	0	0	0	0	646	2,961	0	0	0	0
7:15 AM	0	1	487	1	0	8	214	0	0	17	0	14	0	0	0	1	743	3,115	0	1	2	1
7:30 AM	0	0	446	7	0	24	264	1	0	21	0	16	0	0	0	0	779	3,148	0	0	0	0
7:45 AM	0	0	400	10	0	15	328	0	0	25	0	14	0	0	0	1	793	3,121	0	0	1	0
8:00 AM	0	1	388	6	0	16	335	1	0	40	0	13	0	0	0	0	800	2,979	0	0	0	0
8:15 AM	0	1	390	8	0	18	323	1	0	20	0	14	0	0	0	1	776		0	0	0	0
8:30 AM	0	0	402	10	0	20	274	0	0	30	0	16	0	0	0	0	752		0	1	0	1
8:45 AM	0	2	320	5	0	22	268	0	0	18	0	15	0	0	1	0	651		0	2	0	1

Peak Rolling Hour Flow Rates

Vehicle Type	Eastbound				Westbound				Northbound				Southbound				Total
	U-Turn	Left	Thru	Right	U-Turn	Left	Thru	Right	U-Turn	Left	Thru	Right	U-Turn	Left	Thru	Right	
Articulated Trucks	0	0	7	0	0	1	4	0	0	0	0	1	0	0	0	0	13
Lights	0	2	1,581	30	0	72	1,219	3	0	105	0	55	0	0	0	2	3,069
Mediums	0	0	36	1	0	0	27	0	0	1	0	1	0	0	0	0	66
Total	0	2	1,624	31	0	73	1,250	3	0	106	0	57	0	0	0	2	3,148

All Traffic Data Services Inc.

(303) 216-2439
www.alltrafficdata.net

Location: #28 COBURG AVENUE & HWY. 17 Noon
Date and Start Time: Tuesday, April 19, 2016
Peak Hour: 12:00 PM - 01:00 PM
Peak 15-Minutes: 12:45 PM - 01:00 PM

Peak Hour - All Vehicles

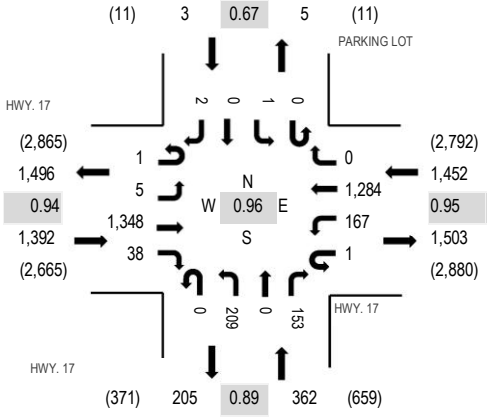

Note: Total study counts contained in parentheses.

Peak Hour - Pedestrians/Bicycles in Crosswalk

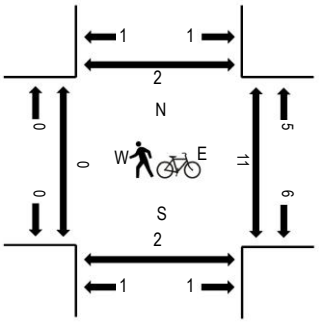

Traffic Counts

Interval Start Time	HWY. 17 Eastbound				HWY. 17 Westbound				COBURG AVENUE Northbound				PARKING LOT Southbound				Total	Rolling Hour	Pedestrain Crossings			
	U-Turn	Left	Thru	Right	U-Turn	Left	Thru	Right	U-Turn	Left	Thru	Right	U-Turn	Left	Thru	Right			West	East	South	North
11:00 AM	0	2	297	7	0	27	237	0	0	38	0	27	0	0	0	3	638	2,918	0	1	0	2
11:15 AM	0	0	308	5	0	33	340	1	0	34	0	34	0	0	0	2	757	3,086	0	1	0	0
11:30 AM	0	1	354	6	0	36	280	1	0	50	0	36	0	0	0	1	765	3,106	0	1	0	0
11:45 AM	0	0	289	4	0	48	336	1	0	46	0	32	0	0	0	2	758	3,135	0	3	1	0
12:00 PM	1	3	328	12	0	43	333	0	0	51	0	34	0	0	0	1	806	3,209	0	5	1	0
12:15 PM	0	0	361	9	0	27	292	0	0	46	0	41	0	0	0	1	777		0	1	0	0
12:30 PM	0	2	313	9	0	56	325	0	0	51	0	37	0	1	0	0	794		0	2	1	0
12:45 PM	0	0	346	8	1	41	334	0	0	61	0	41	0	0	0	0	832		0	3	0	2

Peak Rolling Hour Flow Rates

Vehicle Type	Eastbound				Westbound				Northbound				Southbound				Total
	U-Turn	Left	Thru	Right	U-Turn	Left	Thru	Right	U-Turn	Left	Thru	Right	U-Turn	Left	Thru	Right	
Articulated Trucks	0	0	4	0	0	0	3	0	0	0	0	0	0	0	0	0	7
Lights	1	3	1,316	38	1	167	1,259	0	0	209	0	152	0	1	0	2	3,149
Mediums	0	2	28	0	0	0	22	0	0	0	0	1	0	0	0	0	53
Total	1	5	1,348	38	1	167	1,284	0	0	209	0	153	0	1	0	2	3,209

All Traffic Data Services Inc.

(303) 216-2439
www.alltrafficdata.net

Location: #28 COBURG AVENUE & HWY. 17 PM
Date and Start Time: Tuesday, April 19, 2016
Peak Hour: 04:15 PM - 05:15 PM
Peak 15-Minutes: 04:45 PM - 05:00 PM

Peak Hour - All Vehicles

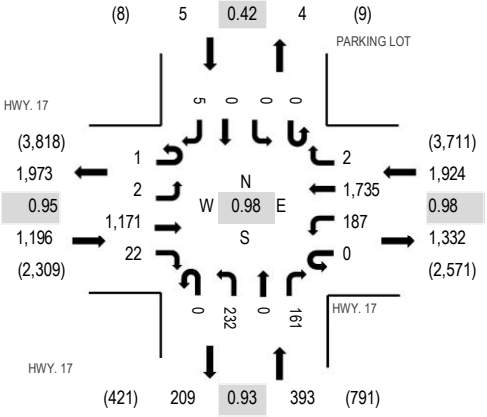

Note: Total study counts contained in parentheses.

Peak Hour - Pedestrians/Bicycles in Crosswalk

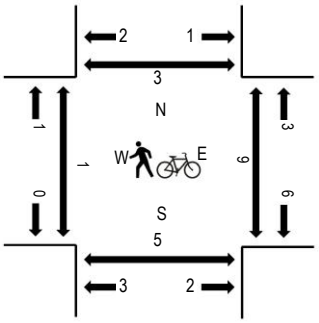

Traffic Counts

Interval Start Time	HWY. 17 Eastbound				HWY. 17 Westbound				COBURG AVENUE Northbound				PARKING LOT Southbound				Total	Rolling Hour	Pedestrain Crossings			
	U-Turn	Left	Thru	Right	U-Turn	Left	Thru	Right	U-Turn	Left	Thru	Right	U-Turn	Left	Thru	Right			West	East	South	North
4:00 PM	0	1	270	7	0	46	413	0	0	63	0	44	0	0	0	0	844	3,502	0	0	0	0
4:15 PM	1	0	295	7	0	44	446	0	0	55	0	43	0	0	0	2	893	3,518	0	1	1	1
4:30 PM	0	1	291	5	0	43	426	1	0	64	0	39	0	0	0	0	870	3,475	1	3	0	1
4:45 PM	0	1	307	8	0	47	436	1	0	50	0	42	0	0	0	3	895	3,431	0	2	3	1
5:00 PM	0	0	278	2	0	53	427	0	0	63	0	37	0	0	0	0	860	3,317	0	3	1	0
5:15 PM	0	0	306	11	0	40	398	0	0	59	0	36	0	0	0	0	850		0	0	0	0
5:30 PM	0	0	263	7	0	54	401	2	0	58	1	40	0	0	0	0	826		0	2	3	3
5:45 PM	0	0	244	4	0	43	389	1	0	62	0	35	0	1	0	2	781		0	3	1	1

Peak Rolling Hour Flow Rates

Vehicle Type	Eastbound				Westbound				Northbound				Southbound				Total
	U-Turn	Left	Thru	Right	U-Turn	Left	Thru	Right	U-Turn	Left	Thru	Right	U-Turn	Left	Thru	Right	
Articulated Trucks	0	0	0	0	0	0	2	0	0	0	0	0	0	0	0	0	2
Lights	1	2	1,152	21	0	187	1,725	2	0	231	0	160	0	0	0	5	3,486
Mediums	0	0	19	1	0	0	8	0	0	1	0	1	0	0	0	0	30
Total	1	2	1,171	22	0	187	1,735	2	0	232	0	161	0	0	0	5	3,518

Short Counts

File Name : Coburg Rd cut thru to Timmerman Dr West Ashley
Site Code : TDCU#1
Start Date : 11/30/2016
Page No : 1

Groups Printed- Passenger Vehicles - Heavy Vehicles - Buses

	Coburg Rd From North					Cut Thru to and from Timmerman Dr From East					Coburg Rd From South					From West					
Start Time	Left	Thru	Right	Peds	App. Total	Left	Thru	Right	Peds	App. Total	Left	Thru	Right	Peds	App. Total	Left	Thru	Right	Peds	App. Total	Int. Total
07:00 AM	2	0	0	0	2	0	0	6	0	6	0	0	0	0	0	0	0	0	0	0	8
07:15 AM	8	0	0	0	8	0	0	8	0	8	0	0	0	0	0	0	0	0	0	0	16
07:30 AM	6	1	0	0	7	0	0	9	0	9	0	1	0	0	1	0	0	0	0	0	17
07:45 AM	3	0	0	0	3	0	0	11	0	11	0	2	1	0	3	0	0	0	0	0	17
Total	19	1	0	0	20	0	0	34	0	34	0	3	1	0	4	0	0	0	0	0	58
08:00 AM	4	1	0	0	5	0	0	5	0	5	0	0	0	0	0	0	0	0	0	0	10
08:15 AM	8	0	0	0	8	0	0	7	0	7	0	0	0	0	0	0	0	0	0	0	15
08:30 AM	6	0	0	0	6	0	0	9	0	9	0	1	0	0	1	0	0	0	0	0	16
08:45 AM	5	0	0	0	5	0	0	8	0	8	0	0	2	0	2	0	0	0	0	0	15
Total	23	1	0	0	24	0	0	29	0	29	0	1	2	0	3	0	0	0	0	0	56
*** BREAK ***																					
02:00 PM	3	0	0	0	3	0	0	7	0	7	0	0	0	0	0	0	0	0	0	0	10
02:15 PM	4	0	0	0	4	0	0	5	0	5	0	0	0	0	0	0	0	0	0	0	9
02:30 PM	5	0	0	0	5	0	0	12	0	12	0	0	1	0	1	0	0	0	0	0	18
02:45 PM	3	0	0	0	3	0	0	7	0	7	0	0	0	0	0	0	0	0	0	0	10
Total	15	0	0	0	15	0	0	31	0	31	0	0	1	0	1	0	0	0	0	0	47
03:00 PM	4	0	0	0	4	0	0	10	0	10	0	0	0	0	0	0	0	0	0	0	14
03:15 PM	4	0	0	0	4	0	0	6	0	6	0	1	0	0	1	0	0	0	0	0	11
03:30 PM	2	0	0	1	3	0	0	10	0	10	0	0	2	0	2	0	0	0	0	0	15
03:45 PM	2	0	0	0	2	0	0	9	0	9	0	0	0	0	0	0	0	0	0	0	11
Total	12	0	0	1	13	0	0	35	0	35	0	1	2	0	3	0	0	0	0	0	51
04:00 PM	5	1	0	1	7	0	0	11	0	11	0	1	0	0	1	0	0	0	0	0	19
04:15 PM	3	1	0	0	4	0	0	16	0	16	0	0	0	0	0	0	0	0	0	0	20
04:30 PM	4	3	0	0	7	0	0	11	0	11	0	0	1	0	1	0	0	0	0	0	19
04:45 PM	2	2	0	1	5	0	0	10	0	10	0	0	2	0	2	0	0	0	0	0	17
Total	14	7	0	2	23	0	0	48	0	48	0	1	3	0	4	0	0	0	0	0	75
05:00 PM	2	0	0	0	2	0	0	9	0	9	0	0	0	0	0	0	0	0	0	0	11
05:15 PM	3	1	0	2	6	0	0	8	0	8	0	0	0	0	0	0	0	0	0	0	14
05:30 PM	4	1	0	1	6	0	0	8	0	8	0	1	0	0	1	0	0	0	0	0	15
05:45 PM	2	0	0	0	2	0	0	7	0	7	0	0	0	0	0	0	0	0	0	0	9
Total	11	2	0	3	16	0	0	32	0	32	0	1	0	0	1	0	0	0	0	0	49
Grand Total	94	11	0	6	111	0	0	209	0	209	0	7	9	0	16	0	0	0	0	0	336
Apprch %	84.7	9.9	0	5.4		0	0	100	0		0	43.8	56.2	0		0	0	0	0		
Total %	28	3.3	0	1.8	33	0	0	62.2	0	62.2	0	2.1	2.7	0	4.8	0	0	0	0	0	
Passenger Vehicles																					
% Passenger Vehicles	98.9	100	0	66.7	97.3	0	0	100	0	100	0	100	100	0	100	0	0	0	0	0	99.1
Heavy Vehicles	0	0	0	2	2	0	0	0	0	0	0	0	0	0	0	0	0	0	0	0	2
% Heavy Vehicles	0	0	0	33.3	1.8	0	0	0	0	0	0	0	0	0	0	0	0	0	0	0	0.6
Buses	1	0	0	0	1	0	0	0	0	0	0	0	0	0	0	0	0	0	0	0	1
% Buses	1.1	0	0	0	0.9	0	0	0	0	0	0	0	0	0	0	0	0	0	0	0	0.3

Short Counts

File Name : Coburg Rd cut thru to Timmerman Dr West Ashley
Site Code : TDCU#1
Start Date : 11/30/2016
Page No : 2

	Coburg Rd From North					Cut Thru to and from Timmerman Dr From East					Coburg Rd From South					From West					
Start Time	Left	Thru	Right	Peds	App. Total	Left	Thru	Right	Peds	App. Total	Left	Thru	Right	Peds	App. Total	Left	Thru	Right	Peds	App. Total	Int. Total
Peak Hour Analysis From 07:00 AM to 11:45 AM - Peak 1 of 1																					
Peak Hour for Entire Intersection Begins at 07:15 AM																					
07:15 AM	**8**				**8**	0	0	8	0	8	0	0	0	0	0	0	0	0	0	0	16
07:30 AM	6	**1**	0	0	7	0	0	9	0	9	0	1	0	0	1	0	0	0	0	0	**17**
07:45 AM	3	0	0	0	3	0	0	**11**		**11**	0	**2**	**1**	0	**3**	0	0	0	0	0	17
08:00 AM	4	1	0	0	5	0	0	5	0	5	0	0	0	0	0	0	0	0	0	0	10
Total Volume	21	2	0	0	23	0	0	33	0	33	0	3	1	0	4	0	0	0	0	0	60
% App. Total	91.3	8.7	0	0		0	0	100	0		0	75	25	0		0	0	0	0		
PHF	.656	.500	.000	.000	.719	.000	.000	.750	.000	.750	.000	.375	.250	.000	.333	.000	.000	.000	.000	.000	.882

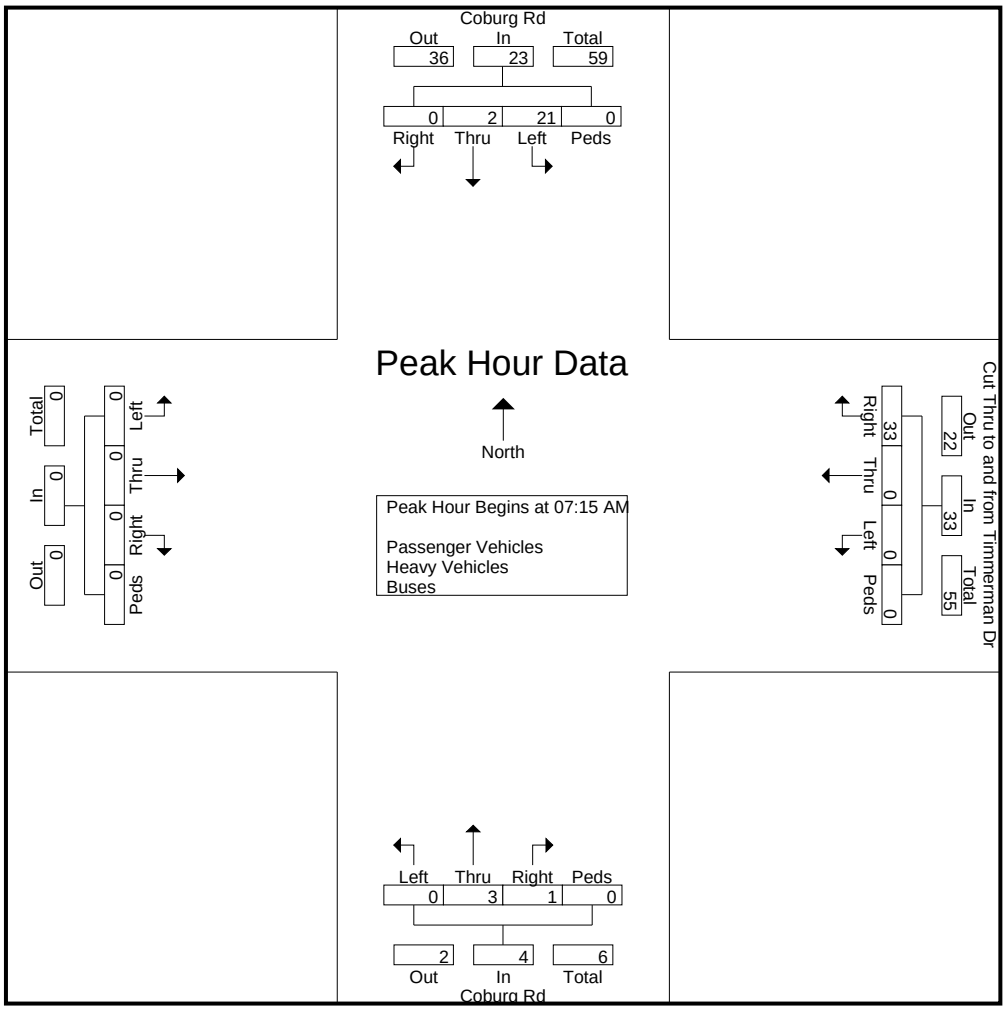

Short Counts

File Name : Coburg Rd cut thru to Timmerman Dr West Ashley
Site Code : TDCU#1
Start Date : 11/30/2016
Page No : 3

	Coburg Rd From North					Cut Thru to and from Timmerman Dr From East					Coburg Rd From South					From West					
Start Time	Left	Thru	Right	Peds	App. Total	Left	Thru	Right	Peds	App. Total	Left	Thru	Right	Peds	App. Total	Left	Thru	Right	Peds	App. Total	Int. Total
Peak Hour Analysis From 12:00 PM to 05:45 PM - Peak 1 of 1																					
Peak Hour for Entire Intersection Begins at 04:00 PM																					
04:00 PM	**5**			**1**	**7**	0	0	11	0	11	0	**1**									
04:15 PM	**3**	**1**	**0**	**0**	**4**	**0**	**0**	**16**	**0**	**16**	0	0	0	0	0	0	0	0	0	0	**20**
04:30 PM	4	**3**	0	0	7	0	0	11	0	11	0	0	1	0	1	0	0	0	0	0	19
04:45 PM	2	2	0	1	5	0	0	10	0	10	0	0	**2**	0	**2**	0	0	0	0	0	17
Total Volume	14	7	0	2	23	0	0	48	0	48	0	1	3	0	4	0	0	0	0	0	75
% App. Total	60.9	30.4	0	8.7		0	0	100	0		0	25	75	0		0	0	0	0		
PHF	.700	.583	.000	.500	.821	.000	.000	.750	.000	.750	.000	.250	.375	.000	.500	.000	.000	.000	.000	.000	.938

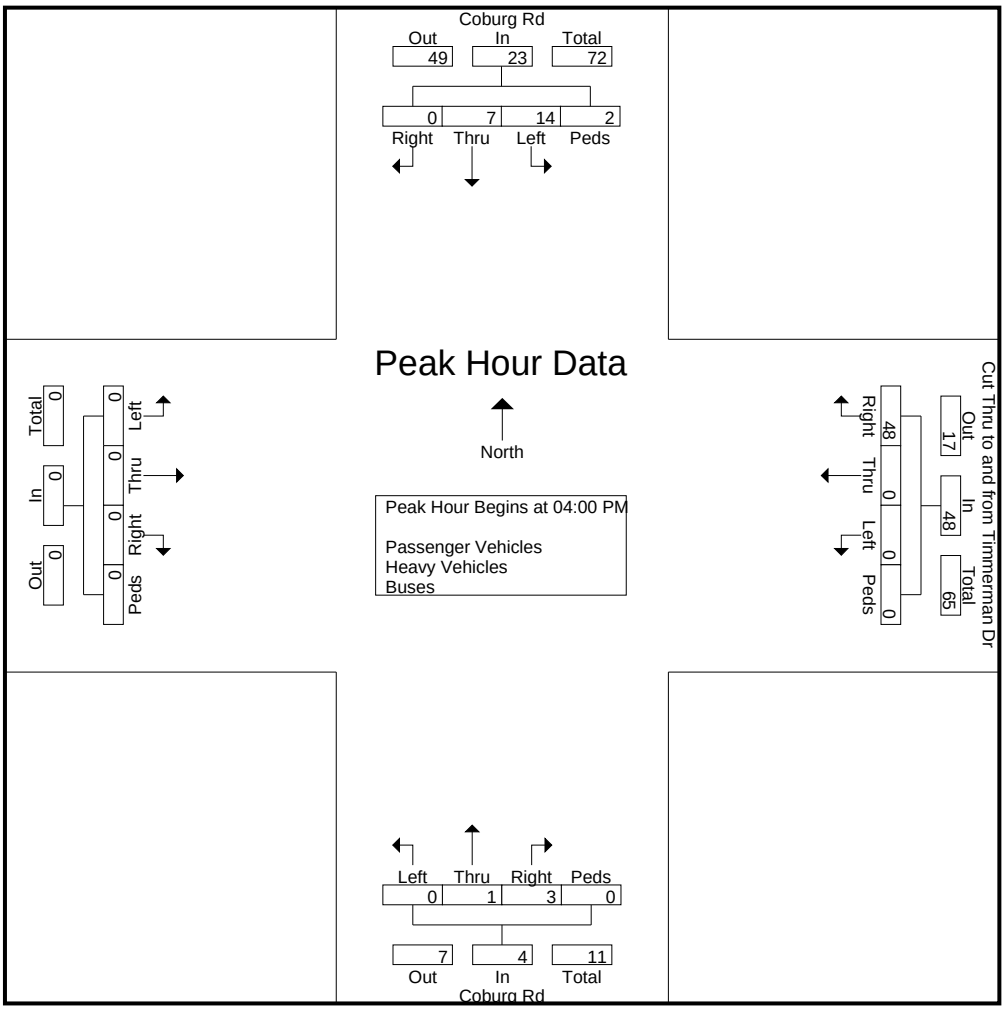

Short Counts

File Name : Timmerman Dr at cut thru to Coburg Rd West Ashley
Site Code : TDCU#1A
Start Date : 11/30/2016
Page No : 1

Groups Printed- Passenger Vehicles - Heavy Vehicles - Buses

	Timmerman Dr From North					From East					Timmerman Dr From South					Cut Thru to Timmerman Dr From West					
Start Time	Left	Thru	Right	Peds	App. Total	Left	Thru	Right	Peds	App. Total	Left	Thru	Right	Peds	App. Total	Left	Thru	Right	Peds	App. Total	Int. Total
07:00 AM	0	1	3	0	4	0	0	0	0	0	3	3	0	0	6	0	0	1	0	1	11
07:15 AM	0	0	1	0	1	0	0	0	0	0	7	3	0	0	10	0	0	8	0	8	19
07:30 AM	0	2	5	1	8	0	0	0	0	0	4	5	0	0	9	2	0	5	0	7	24
07:45 AM	0	2	3	0	5	0	0	0	0	0	4	2	0	0	6	0	0	4	0	4	15
Total	0	5	12	1	18	0	0	0	0	0	18	13	0	0	31	2	0	18	0	20	69
08:00 AM	0	0	4	0	4	0	0	0	0	0	8	7	0	0	15	0	0	4	0	4	23
08:15 AM	0	0	2	0	2	0	0	0	0	0	5	3	0	0	8	1	0	7	0	8	18
08:30 AM	0	0	6	0	6	0	0	0	0	0	3	4	0	0	7	0	0	5	0	5	18
08:45 AM	0	1	3	2	6	0	0	0	0	0	5	5	0	0	10	0	0	6	0	6	22
Total	0	1	15	2	18	0	0	0	0	0	21	19	0	0	40	1	0	22	0	23	81
*** BREAK ***																					
02:00 PM	0	1	7	0	8	0	0	0	0	0	4	1	0	0	5	3	0	2	0	5	18
02:15 PM	0	2	7	0	9	0	0	0	0	0	3	2	0	0	5	8	0	3	0	11	25
02:30 PM	0	0	8	2	10	0	0	0	0	0	4	1	0	0	5	6	0	6	0	12	27
02:45 PM	0	1	8	2	11	0	0	0	0	0	3	1	0	0	4	5	0	4	0	9	24
Total	0	4	30	4	38	0	0	0	0	0	14	5	0	0	19	22	0	15	0	37	94
03:00 PM	0	0	5	0	5	0	0	0	0	0	5	2	0	0	7	7	0	3	0	10	22
03:15 PM	0	2	3	0	5	0	0	0	0	0	3	0	0	0	3	4	0	4	0	8	16
03:30 PM	0	1	4	0	5	0	0	0	0	0	7	1	0	0	8	7	0	1	0	8	21
03:45 PM	0	1	5	1	7	0	0	0	0	0	4	3	0	0	7	5	0	3	0	8	22
Total	0	4	17	1	22	0	0	0	0	0	19	6	0	0	25	23	0	11	0	34	81
04:00 PM	0	3	9	0	12	0	0	0	0	0	2	2	0	0	4	3	0	5	0	8	24
04:15 PM	0	1	11	2	14	0	0	0	0	0	5	4	0	0	9	8	0	3	0	11	34
04:30 PM	0	4	5	1	10	0	0	0	0	0	3	2	0	0	5	11	0	3	0	14	29
04:45 PM	0	2	7	0	9	0	0	0	0	0	3	3	0	0	6	5	0	4	0	9	24
Total	0	10	32	3	45	0	0	0	0	0	13	11	0	0	24	27	0	15	0	42	111
05:00 PM	0	1	4	0	5	0	0	0	0	0	5	1	0	0	6	6	0	1	0	7	18
05:15 PM	0	2	6	0	8	0	0	0	0	0	2	1	0	0	3	7	0	2	0	9	20
05:30 PM	0	1	5	1	7	0	0	0	0	0	2	4	0	0	6	8	0	5	0	13	26
05:45 PM	0	3	6	0	9	0	0	0	0	0	3	2	0	0	5	4	0	3	0	7	21
Total	0	7	21	1	29	0	0	0	0	0	12	8	0	0	20	25	0	11	0	36	85
Grand Total	0	31	127	12	170	0	0	0	0	0	97	62	0	0	159	100	0	92	0	192	521
Apprch %	0	18.2	74.7	7.1		0	0	0	0		61	39	0	0		52.1	0	47.9	0		
Total %	0	6	24.4	2.3	32.6	0	0	0	0	0	18.6	11.9	0	0	30.5	19.2	0	17.7	0	36.9	
Passenger Vehicles																					
% Passenger Vehicles	0	90.3	100	100	98.2	0	0	0	0	0	100	100	0	0	100	98	0	97.8	0	97.9	98.7
Heavy Vehicles	0	2	0	0	2	0	0	0	0	0	0	0	0	0	0	2	0	1	0	3	5
% Heavy Vehicles	0	6.5	0	0	1.2	0	0	0	0	0	0	0	0	0	0	2	0	1.1	0	1.6	1
Buses	0	1	0	0	1	0	0	0	0	0	0	0	0	0	0	0	0	1	0	1	2
% Buses	0	3.2	0	0	0.6	0	0	0	0	0	0	0	0	0	0	0	0	1.1	0	0.5	0.4

Short Counts

File Name : Timmerman Dr at cut thru to Coburg Rd West Ashley
Site Code : TDCU#1A
Start Date : 11/30/2016
Page No : 2

	Timmerman Dr From North					From East					Timmerman Dr From South					Cut Thru to Timmerman Dr From West					
Start Time	Left	Thru	Right	Peds	App. Total	Left	Thru	Right	Peds	App. Total	Left	Thru	Right	Peds	App. Total	Left	Thru	Right	Peds	App. Total	Int. Total
Peak Hour Analysis From 07:00 AM to 11:45 AM - Peak 1 of 1																					
Peak Hour for Entire Intersection Begins at 07:15 AM																					
07:15 AM	0	0	1	0	1	0	0	0	0	0	7	3	0	0	10	0	0	**8**		**8**	19
07:30 AM	0	**2**	**5**	**1**	**8**	0	0	0	0	0	4	5	0	0	9	**2**					**24**
07:45 AM	0	2	3	0	5	0	0	0	0	0	4	2	0	0	6	0	0	4	0	4	15
08:00 AM	0	0	4	0	4	0	0	0	0	0	**8**	**7**			**15**	0	0	4	0	4	23
Total Volume	0	4	13	1	18	0	0	0	0	0	23	17	0	0	40	2	0	21	0	23	81
% App. Total	0	22.2	72.2	5.6		0	0	0	0		57.5	42.5	0	0		8.7	0	91.3	0		
PHF	.000	.500	.650	.250	.563	.000	.000	.000	.000	.000	.719	.607	.000	.000	.667	.250	.000	.656	.000	.719	.844

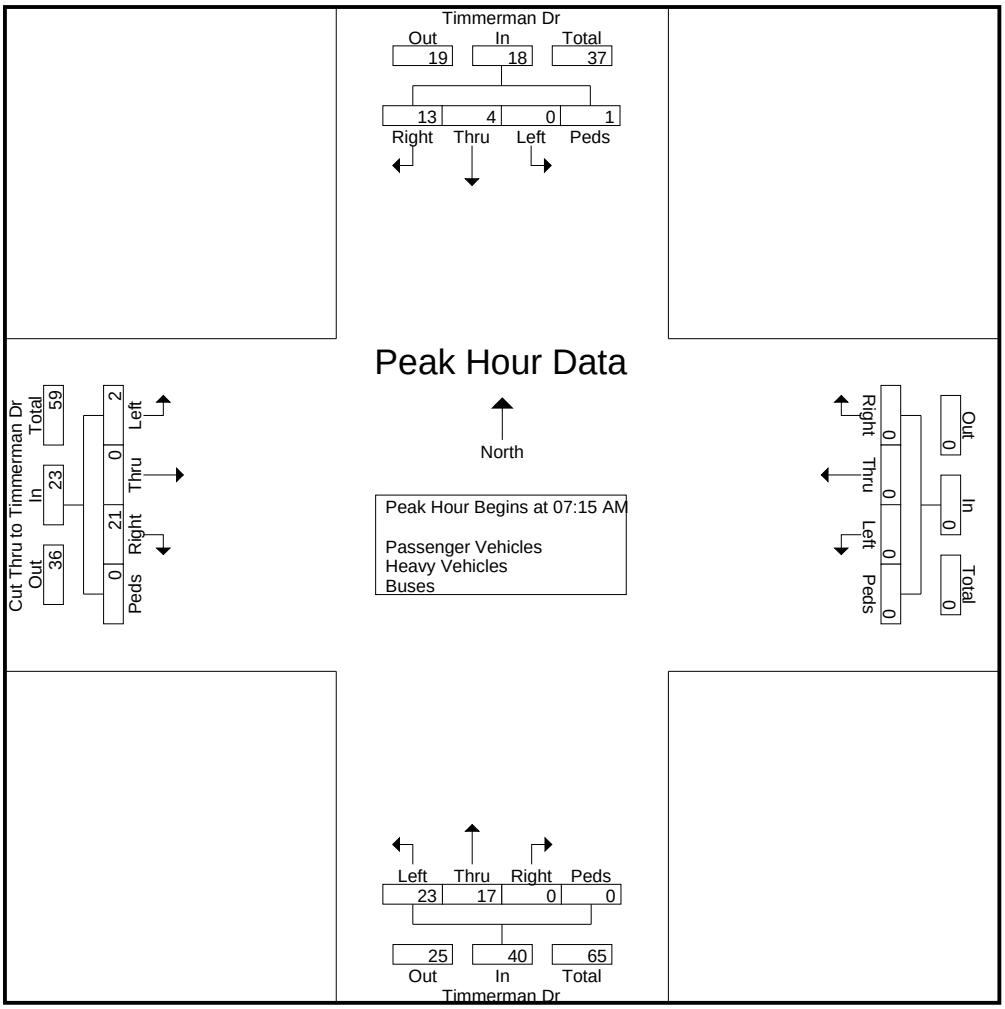

Short Counts

File Name : Timmerman Dr at cut thru to Coburg Rd West Ashley
Site Code : TDCU#1A
Start Date : 11/30/2016
Page No : 3

	Timmerman Dr From North					From East					Timmerman Dr From South					Cut Thru to Timmerman Dr From West					
Start Time	Left	Thru	Right	Peds	App. Total	Left	Thru	Right	Peds	App. Total	Left	Thru	Right	Peds	App. Total	Left	Thru	Right	Peds	App. Total	Int. Total
Peak Hour Analysis From 12:00 PM to 05:45 PM - Peak 1 of 1																					
Peak Hour for Entire Intersection Begins at 04:00 PM																					
04:00 PM	0	3	9	0	12	0	0	0	0	0	2	2	0	0	4	3	0	**5**			
04:15 PM	**0**	**1**	**11**	**2**	**14**	0	0	0	0	0	**5**	**4**	**0**	**0**	**9**	8	0	3	0	11	**34**
04:30 PM	0	**4**	5	1	10	0	0	0	0	0	3	2	0	0	5	**11**				**14**	29
04:45 PM	0	2	7	0	9	0	0	0	0	0	3	3	0	0	6	5	0	4	0	9	24
Total Volume	0	10	32	3	45	0	0	0	0	0	13	11	0	0	24	27	0	15	0	42	111
% App. Total	0	22.2	71.1	6.7		0	0	0	0		54.2	45.8	0	0		64.3	0	35.7	0		
PHF	.000	.625	.727	.375	.804	.000	.000	.000	.000	.000	.650	.688	.000	.000	.667	.614	.000	.750	.000	.750	.816

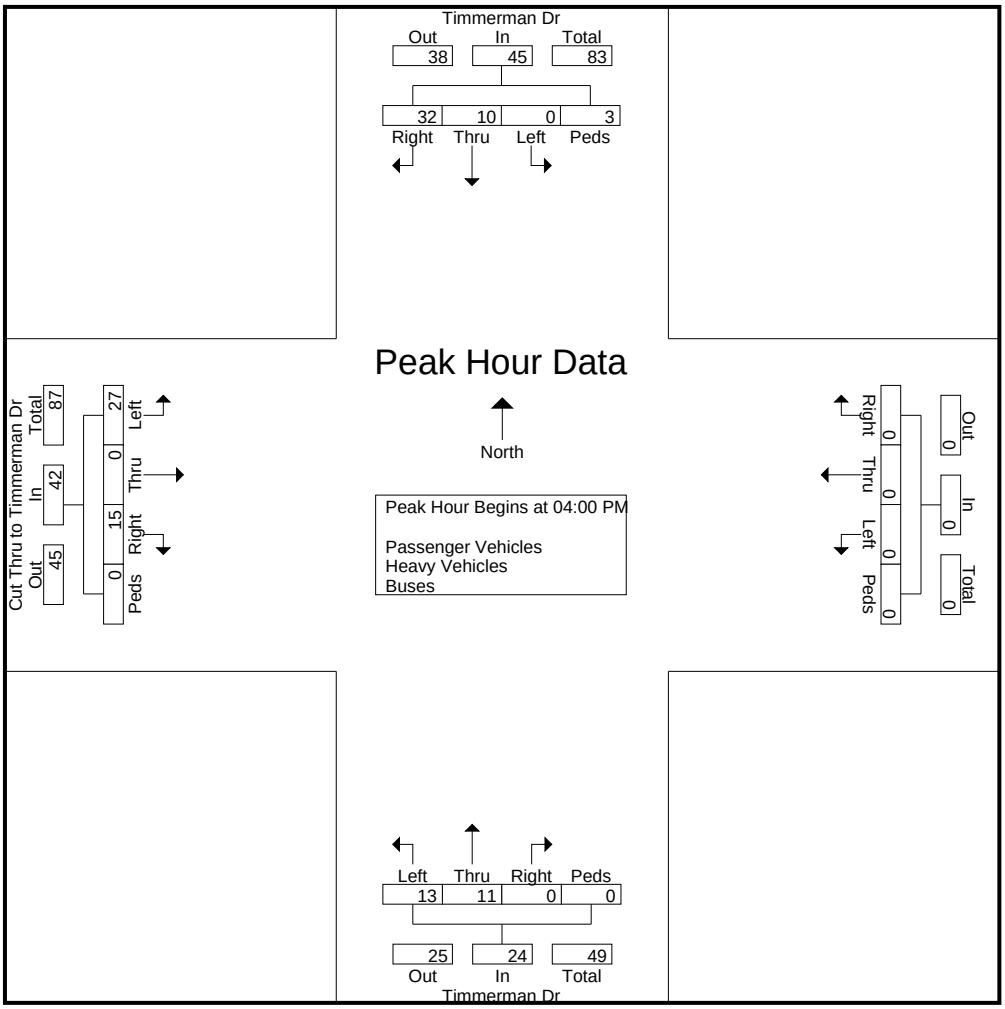

Short Counts

File Name : Nickolson St @ Lyttleton-Sothel Ave
Site Code :
Start Date : 11/30/2016
Page No : 1

Groups Printed- Passenger Vehicles - Heavy Vehicles - Buses

	Nickolson St From North					Lyttleton Ave From East					Nickolson St From South					Sothel Ave From West					
Start Time	Left	Thru	Right	Peds	App. Total	Left	Thru	Right	Peds	App. Total	Left	Thru	Right	Peds	App. Total	Left	Thru	Right	Peds	App. Total	Int. Total
07:00 AM	0	0	0	0	0	0	2	0	0	2	0	5	0	0	5	1	0	0	2	3	10
07:15 AM	0	1	3	0	4	1	2	1	0	4	0	7	2	0	9	3	1	0	1	5	22
07:30 AM	1	1	2	0	4	4	3	0	0	7	1	4	2	0	7	5	2	0	1	8	26
07:45 AM	1	2	5	1	9	1	1	0	0	2	0	8	1	0	9	10	3	0	0	13	33
Total	2	4	10	1	17	6	8	1	0	15	1	24	5	0	30	19	6	0	4	29	91
08:00 AM	1	4	11	0	16	1	3	0	0	4	0	7	0	0	7	10	2	0	0	12	39
08:15 AM	0	6	16	0	22	1	3	0	0	4	0	7	0	0	7	7	0	0	1	8	41
08:30 AM	0	5	13	0	18	0	2	0	0	2	1	8	1	0	10	6	0	0	0	6	36
08:45 AM	0	2	10	0	12	0	2	0	0	2	0	7	0	0	7	3	0	0	1	4	25
Total	1	17	50	0	68	2	10	0	0	12	1	29	1	0	31	26	2	0	2	30	141
02:00 PM	0	2	5	0	7	0	2	0	0	2	0	3	1	0	4	3	0	0	1	4	17
02:15 PM	1	4	4	0	9	3	1	0	0	4	0	3	0	0	3	5	3	0	0	8	24
02:30 PM	1	6	5	1	13	0	0	0	0	0	0	6	1	0	7	5	1	0	2	8	28
02:45 PM	1	6	4	0	11	0	2	1	0	3	0	1	1	0	2	4	1	1	0	6	22
Total	3	18	18	1	40	3	5	1	0	9	0	13	3	0	16	17	5	1	3	26	91
03:00 PM	1	7	4	0	12	0	0	0	0	0	0	5	1	1	7	9	1	0	0	10	29
03:15 PM	0	6	9	0	15	0	2	2	0	4	0	4	0	0	4	0	0	0	0	0	23
03:30 PM	1	3	18	0	22	2	5	1	1	9	1	0	0	0	1	4	1	0	0	5	37
03:45 PM	0	1	30	0	31	1	0	0	1	2	0	4	0	1	5	6	1	0	0	7	45
Total	2	17	61	0	80	3	7	3	2	15	1	13	1	2	17	19	3	0	0	22	134
04:00 PM	1	5	15	0	21	2	0	0	0	2	0	5	1	0	6	4	1	0	0	5	34
04:15 PM	4	5	17	0	26	1	2	1	0	4	0	4	0	0	4	2	2	0	0	4	38
04:30 PM	2	4	15	0	21	0	1	0	1	2	0	1	0	0	1	7	4	0	2	13	37
04:45 PM	3	3	23	0	29	2	4	2	1	9	0	1	1	0	2	5	2	0	2	9	49
Total	10	17	70	0	97	5	7	3	2	17	0	11	2	0	13	18	9	0	4	31	158
05:00 PM	3	7	17	0	27	0	3	0	1	4	0	0	0	0	0	9	2	1	0	12	43
05:15 PM	1	8	21	0	30	1	2	1	1	5	0	1	1	0	2	4	3	0	0	7	44
05:30 PM	2	8	15	0	25	2	3	1	5	11	0	4	1	3	8	9	3	0	2	14	58
05:45 PM	1	6	12	0	19	2	4	2	1	9	0	3	1	2	6	7	2	0	1	10	44
Total	7	29	65	0	101	5	12	4	8	29	0	8	3	5	16	29	10	1	3	43	189
Grand Total	25	102	274	2	403	24	49	12	12	97	3	98	15	7	123	128	35	2	16	181	804
Apprch %	6.2	25.3	68	0.5		24.7	50.5	12.4	12.4		2.4	79.7	12.2	5.7		70.7	19.3	1.1	8.8		
Total %	3.1	12.7	34.1	0.2	50.1	3	6.1	1.5	1.5	12.1	0.4	12.2	1.9	0.9	15.3	15.9	4.4	0.2	2	22.5	
Passenger Vehicles	24	99	272	2	397	23	49	12	12	96	3	92	15	7	117	128	34	2	16	180	790
% Passenger Vehicles																					
Heavy Vehicles	1	2	2	0	5	1	0	0	0	1	0	5	0	0	5	0	1	0	0	1	12
% Heavy Vehicles	4	2	0.7	0	1.2	4.2	0	0	0	1	0	5.1	0	0	4.1	0	2.9	0	0	0.6	1.5
Buses	0	1	0	0	1	0	0	0	0	0	0	1	0	0	1	0	0	0	0	0	2
% Buses	0	1	0	0	0.2	0	0	0	0	0	0	1	0	0	0.8	0	0	0	0	0	0.2

Short Counts

File Name : Nickolson St @ Lyttleton-Sothel Ave
Site Code :
Start Date : 11/30/2016
Page No : 2

	Nickolson St From North					Lyttleton Ave From East					Nickolson St From South					Sothel Ave From West					
Start Time	Left	Thru	Right	Peds	App. Total	Left	Thru	Right	Peds	App. Total	Left	Thru	Right	Peds	App. Total	Left	Thru	Right	Peds	App. Total	Int. Total
Peak Hour Analysis From 07:00 AM to 11:45 AM - Peak 1 of 1																					
Peak Hour for Entire Intersection Begins at 07:45 AM																					
07:45 AM	**1**	2	5	**1**	9	**1**	1	0	0	2	0	**8**	**1**	0	9	**10**	**3**	0	0	**13**	33
08:00 AM	1	4	11	0	16	1	**3**	0	0	**4**	0	7	0	0	7	10	2	0	0	12	39
08:15 AM	0	**6**	**16**	0	**22**	1	3	0	0	4	0	7	0	0	7	7	0	0	**1**	8	**41**
08:30 AM	0	5	13	0	18	0	2	0	0	2	**1**	8	1	0	**10**	6	0	0	0	6	36
Total Volume	2	17	45	1	65	3	9	0	0	12	1	30	2	0	33	33	5	0	1	39	149
% App. Total	3.1	26.2	69.2	1.5		25	75	0	0		3	90.9	6.1	0		84.6	12.8	0	2.6		
PHF	.500	.708	.703	.250	.739	.750	.750	.000	.000	.750	.250	.938	.500	.000	.825	.825	.417	.000	.250	.750	.909

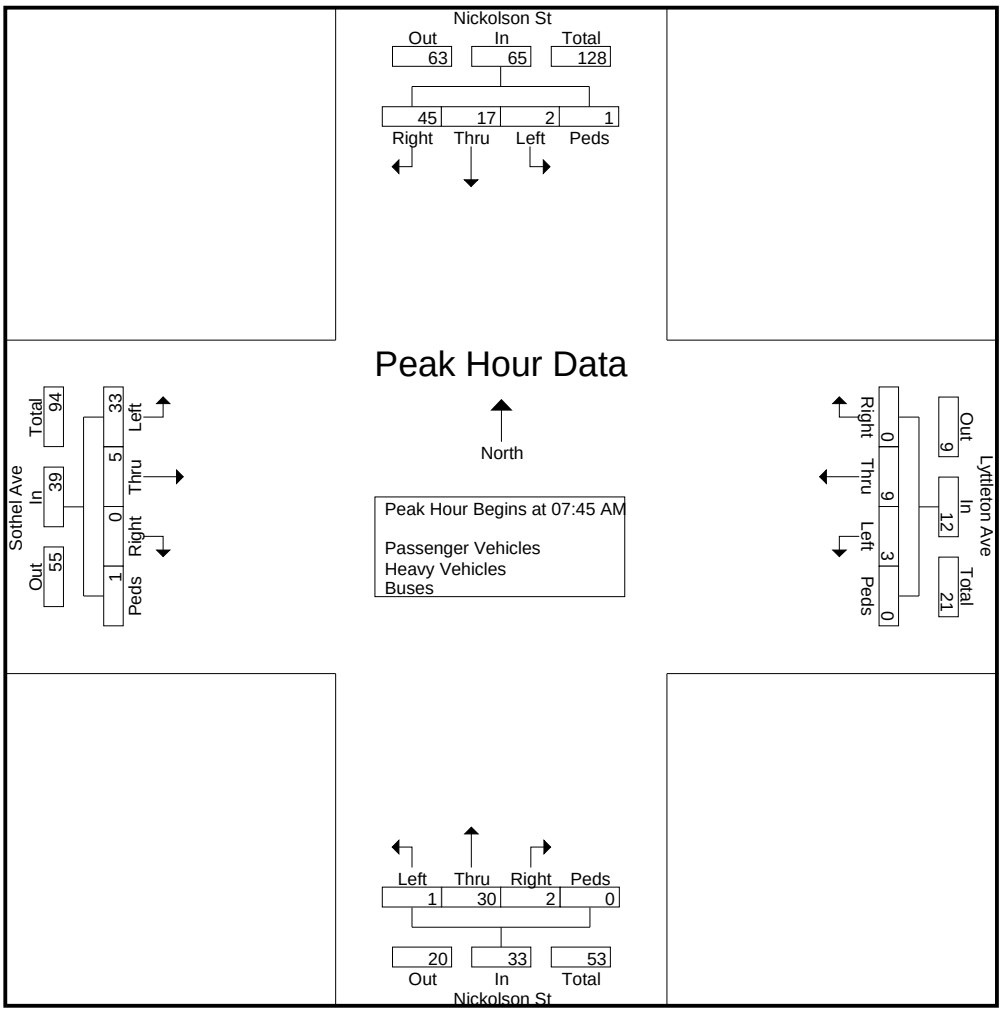

Short Counts

File Name : Nickolson St @ Lyttleton-Sothel Ave
Site Code :
Start Date : 11/30/2016
Page No : 3

	Nickolson St From North					Lyttleton Ave From East					Nickolson St From South					Sothel Ave From West					
Start Time	Left	Thru	Right	Peds	App. Total	Left	Thru	Right	Peds	App. Total	Left	Thru	Right	Peds	App. Total	Left	Thru	Right	Peds	App. Total	Int. Total
Peak Hour Analysis From 12:00 PM to 05:45 PM - Peak 1 of 1																					
Peak Hour for Entire Intersection Begins at 04:45 PM																					
04:45 PM	**3**	3	**23**	0	29	**2**	**4**	**2**	1	9	0	1	**1**	0	2	5	2	0	**2**	9	49
05:00 PM	3	7	17	0	27	0	3	0	1	4	0	0	0	0	0	**9**	2	**1**	0	12	43
05:15 PM	1	**8**	21	0	**30**	1	2	1	1	5	0	1	1	0	2	4	**3**	0	0	7	44
05:30 PM	2	8	15	0	25	2	3	1	**5**	**11**	0	**4**	1	**3**	**8**	9	3	0	2	**14**	**58**
Total Volume	9	26	76	0	111	5	12	4	8	29	0	6	3	3	12	27	10	1	4	42	194
% App. Total	8.1	23.4	68.5	0		17.2	41.4	13.8	27.6		0	50	25	25		64.3	23.8	2.4	9.5		
PHF	.750	.813	.826	.000	.925	.625	.750	.500	.400	.659	.000	.375	.750	.250	.375	.750	.833	.250	.500	.750	.836

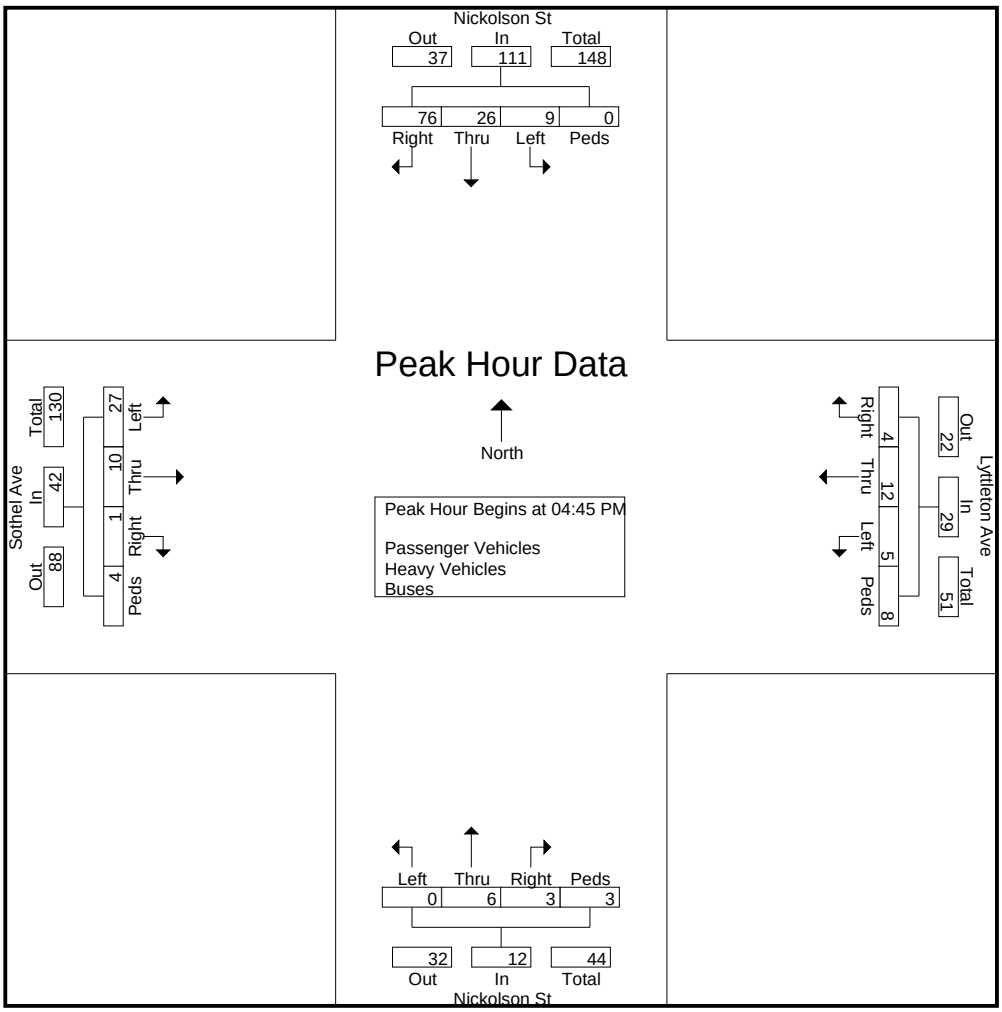

Short Counts

File Name : Campbell Dr @ Yeadon Ave
Site Code :
Start Date : 11/30/2016
Page No : 1

Groups Printed- Passenger Vehicles - Heavy Vehicles - Buses

	Campbell Dr From North					From East					Campbell Dr From South					Yeadon Ave From West					
Start Time	Left	Thru	Right	Peds	App. Total	Left	Thru	Right	Peds	App. Total	Left	Thru	Right	Peds	App. Total	Left	Thru	Right	Peds	App. Total	Int. Total
07:00 AM	0	7	0	0	7	0	0	0	0	0	0	0	0	0	0	0	0	5	0	5	12
07:15 AM	0	8	1	0	9	0	0	0	0	0	1	2	0	0	3	4	0	16	0	20	32
07:30 AM	0	8	1	0	9	0	0	0	0	0	5	2	0	0	7	3	0	41	0	44	60
07:45 AM	0	11	0	0	11	0	0	0	0	0	6	2	0	0	8	9	0	50	0	59	78
Total	0	34	2	0	36	0	0	0	0	0	12	6	0	0	18	16	0	112	0	128	182
08:00 AM	0	9	1	0	10	0	0	0	0	0	22	9	0	0	31	7	0	59	0	66	107
08:15 AM	0	21	3	0	24	0	0	0	0	0	25	14	0	0	39	12	0	62	1	75	138
08:30 AM	0	4	0	0	4	0	0	0	0	0	21	10	0	0	31	4	0	27	0	31	66
08:45 AM	0	3	2	0	5	0	0	0	0	0	7	2	0	0	9	7	0	11	0	18	32
Total	0	37	6	0	43	0	0	0	0	0	75	35	0	0	110	30	0	159	1	190	343
02:00 PM	0	5	0	0	5	0	0	0	0	0	5	1	0	0	6	0	0	10	0	10	21
02:15 PM	0	5	0	0	5	0	0	0	0	0	5	3	0	0	8	2	0	7	0	9	22
02:30 PM	0	5	0	0	5	0	0	0	0	0	8	1	0	0	9	2	0	10	0	12	26
02:45 PM	0	10	0	0	10	0	0	0	0	0	3	2	0	0	5	0	0	11	0	11	26
Total	0	25	0	0	25	0	0	0	0	0	21	7	0	0	28	4	0	38	0	42	95
03:00 PM	0	16	1	0	17	0	0	0	0	0	5	2	0	0	7	1	0	10	0	11	35
03:15 PM	0	15	2	0	17	0	0	0	0	0	10	8	0	0	18	2	0	7	0	9	44
03:30 PM	0	20	5	0	25	0	0	0	0	0	27	16	0	0	43	4	0	11	0	15	83
03:45 PM	0	6	0	0	6	0	0	0	0	0	34	18	0	0	52	2	0	6	0	8	66
Total	0	57	8	0	65	0	0	0	0	0	76	44	0	0	120	9	0	34	0	43	228
04:00 PM	0	6	1	0	7	0	0	0	0	0	15	2	0	0	17	4	0	7	0	11	35
04:15 PM	0	4	2	0	6	0	0	0	0	0	26	2	0	0	28	0	0	9	1	10	44
04:30 PM	0	9	2	0	11	0	0	0	0	0	18	2	0	0	20	2	0	13	0	15	46
04:45 PM	0	4	4	0	8	0	0	0	0	0	30	4	0	0	34	1	0	12	0	13	55
Total	0	23	9	0	32	0	0	0	0	0	89	10	0	0	99	7	0	41	1	49	180
05:00 PM	0	7	2	0	9	0	0	0	0	0	27	3	0	0	30	3	0	16	0	19	58
05:15 PM	0	10	2	0	12	0	0	0	0	0	25	5	0	0	30	1	0	16	0	17	59
05:30 PM	0	5	4	0	9	0	0	0	0	0	20	3	0	0	23	1	0	14	0	15	47
05:45 PM	0	2	6	0	8	0	0	0	0	0	21	0	0	0	21	0	0	15	0	15	44
Total	0	24	14	0	38	0	0	0	0	0	93	11	0	0	104	5	0	61	0	66	208
Grand Total	0	200	39	0	239	0	0	0	0	0	366	113	0	0	479	71	0	445	2	518	1236
Apprch %	0	83.7	16.3	0		0	0	0	0		76.4	23.6	0	0		13.7	0	85.9	0.4		
Total %	0	16.2	3.2	0	19.3	0	0	0	0	0	29.6	9.1	0	0	38.8	5.7	0	36	0.2	41.9	
Passenger Vehicles	0	199	39	0	238	0	0	0	0	0	364	112	0	0	476	70	0	445	2	517	1231
% Passenger Vehicles																					
Heavy Vehicles	0	1	0	0	1	0	0	0	0	0	2	1	0	0	3	1	0	0	0	1	5
% Heavy Vehicles	0	0.5	0	0	0.4	0	0	0	0	0	0.5	0.9	0	0	0.6	1.4	0	0	0	0.2	0.4
Buses	0	0	0	0	0	0	0	0	0	0	0	0	0	0	0	0	0	0	0	0	0
% Buses	0	0	0	0	0	0	0	0	0	0	0	0	0	0	0	0	0	0	0	0	0

Short Counts

File Name : Campbell Dr @ Yeadon Ave
Site Code :
Start Date : 11/30/2016
Page No : 2

	Campbell Dr From North					From East					Campbell Dr From South					Yeadon Ave From West					
Start Time	Left	Thru	Right	Peds	App. Total	Left	Thru	Right	Peds	App. Total	Left	Thru	Right	Peds	App. Total	Left	Thru	Right	Peds	App. Total	Int. Total
Peak Hour Analysis From 07:00 AM to 12:30 PM - Peak 1 of 1																					
Peak Hour for Entire Intersection Begins at 07:45 AM																					
07:45 AM	0	11	0	0	11	0	0	0	0	0	6	2	0	0	8	9	0	50	0	59	78
08:00 AM	0	9	1	0	10	0	0	0	0	0	22	9	0	0	31	7	0	59	0	66	107
08:15 AM	0	**21**	**3**	0	**24**	0	0	0	0	0	**25**	**14**	0	0	**39**	**12**	0	**62**	**1**	**75**	**138**
08:30 AM	0	4	0	0	4	0	0	0	0	0	21	10	0	0	31	4	0	27	0	31	66
Total Volume	0	45	4	0	49	0	0	0	0	0	74	35	0	0	109	32	0	198	1	231	389
% App. Total	0	91.8	8.2	0		0	0	0	0		67.9	32.1	0	0		13.9	0	85.7	0.4		
PHF	.000	.536	.333	.000	.510	.000	.000	.000	.000	.000	.740	.625	.000	.000	.699	.667	.000	.798	.250	.770	.705

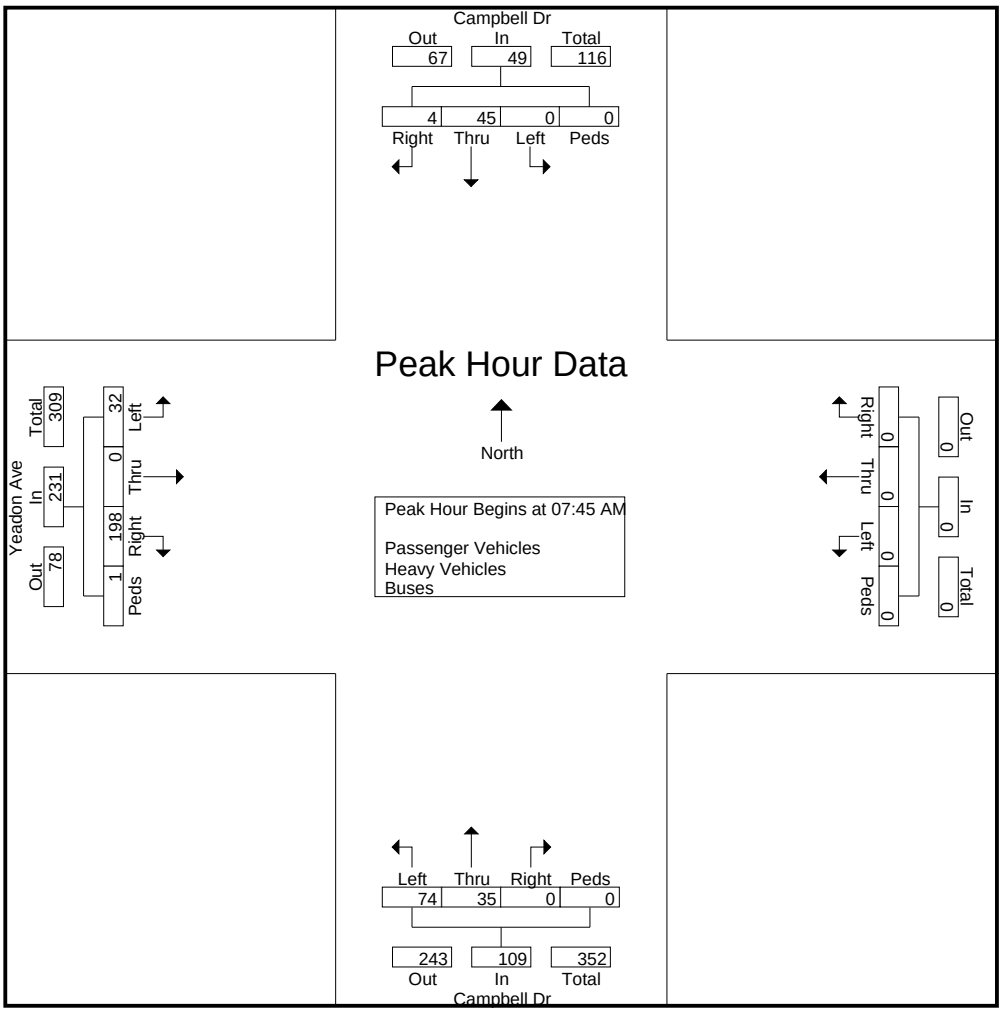

Short Counts

File Name : Campbell Dr @ Yeadon Ave
Site Code :
Start Date : 11/30/2016
Page No : 3

	Campbell Dr From North					From East					Campbell Dr From South					Yeadon Ave From West					
Start Time	Left	Thru	Right	Peds	App. Total	Left	Thru	Right	Peds	App. Total	Left	Thru	Right	Peds	App. Total	Left	Thru	Right	Peds	App. Total	Int. Total
Peak Hour Analysis From 12:45 PM to 05:45 PM - Peak 1 of 1																					
Peak Hour for Entire Intersection Begins at 03:00 PM																					
03:00 PM	0	16	1	0	17	0	0	0	0	0	5	2	0	0	7	1	0	10	0	11	35
03:15 PM	0	15	2	0	17	0	0	0	0	0	10	8	0	0	18	2	0	7	0	9	44
03:30 PM	0	**20**	**5**	0	**25**	0	0	0	0	0	27	16	0	0	43	**4**	0	**11**	0	**15**	**83**
03:45 PM	0	6	0	0	6	0	0	0	0	0	**34**	**18**	0	0	**52**	2	0	6	0	8	66
Total Volume	0	57	8	0	65	0	0	0	0	0	76	44	0	0	120	9	0	34	0	43	228
% App. Total	0	87.7	12.3	0		0	0	0	0		63.3	36.7	0	0		20.9	0	79.1	0		
PHF	.000	.713	.400	.000	.650	.000	.000	.000	.000	.000	.559	.611	.000	.000	.577	.563	.000	.773	.000	.717	.687

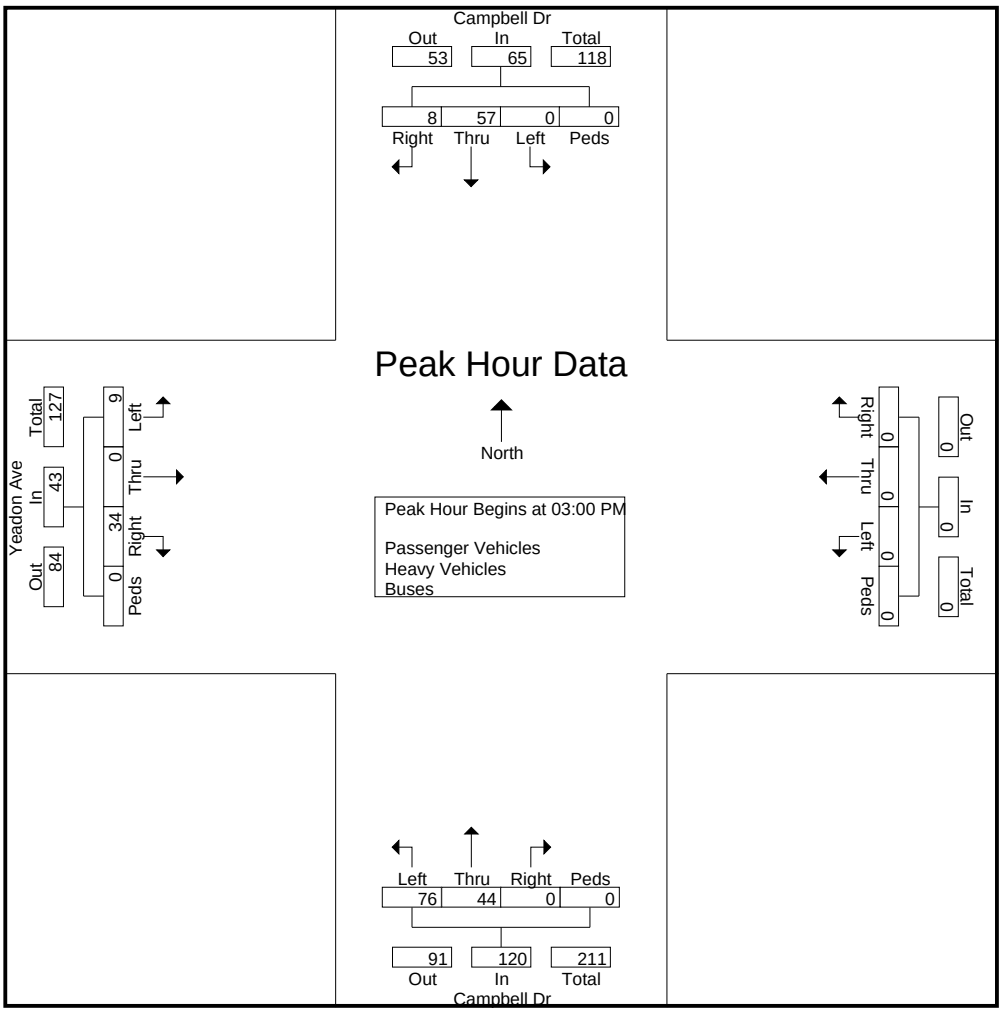

INTERSECTION VOLUME DEVELOPMENT

Coburg Rd at Savannah Hwy
AM PEAK HOUR

Description	Coburg Rd Northbound			Driveway Southbound			Savannah Highway Eastbound			Savannah Highway Westbound		
	Left	Through	Right	Left	Through	Right	Left	Through	Right	Left	Through	Right
Existing 2016 AM Volumes	106	0	57	0	0	2	2	1,624	31	73	1,250	3
Pedestrians		1			0			1			0	
Heavy Vehicle %		1.8%			0.0%			2.7%			2.4%	
Peak Hour Factor		0.81			0.50			0.90			0.95	
Annual Growth Rate	2.0%	2.0%	2.0%	2.0%	2.0%	2.0%	2.0%	2.0%	2.0%	2.0%	2.0%	2.0%
Growth Factor	1.040	1.040	1.040	1.040	1.040	1.040	1.040	1.040	1.040	1.040	1.040	1.040
2018 Background Traffic	110	0	59	0	0	2	2	1,690	32	76	1,301	3
New Project Trips												
Trip Distribution IN									50%	40%		
Trip Distribution OUT	50%		25%									
Pass-by Project Trips												
Trip Distribution IN												
Trip Distribution OUT												
New Trips	13	0	6	0	0	0	0	0	7	5	0	0
Pass-By Trips	0	0	0	0	0	0	0	0	0	0	0	0
Total Project Trips	13	0	6	0	0	0	0	0	7	5	0	0
2018 Buildout Total	**123**	**0**	**65**	**0**	**0**	**2**	**2**	**1,690**	**39**	**81**	**1,301**	**3**

**US 17 is traditionally northbound and southbound, but in the study area, it is eastbound and westbound*

PM PEAK HOUR

Description	Coburg Rd Northbound			Driveway Southbound			Savannah Highway Eastbound			Savannah Highway Westbound		
	Left	Through	Right	Left	Through	Right	Left	Through	Right	Left	Through	Right
Existing 2016 PM Volumes	232	0	161	0	0	5	2	1,171	22	187	1,735	2
Pedestrians		9			1			5			3	
Heavy Vehicle %		0.5%			0.0%			1.7%			0.5%	
Peak Hour Factor		0.93			0.42			0.95			0.98	
Annual Growth Rate	2.0%	2.0%	2.0%	2.0%	2.0%	2.0%	2.0%	2.0%	2.0%	2.0%	2.0%	2.0%
Growth Factor	1.040	1.040	1.040	1.040	1.040	1.040	1.040	1.040	1.040	1.040	1.040	1.040
2018 Background Traffic	241	0	168	0	0	5	2	1,218	23	195	1,805	2
New Project Trips												
Trip Distribution IN									50%	40%		
Trip Distribution OUT	50%		25%									
Pass-by Project Trips												
Trip Distribution IN												
Trip Distribution OUT												
New Trips	11	0	6	0	0	0	0	0	13	10	0	0
Pass-By Trips	0	0	0	0	0	0	0	0	0	0	0	0
Total Project Trips	11	0	6	0	0	0	0	0	13	10	0	0
2018 Buildout Total	**252**	**0**	**174**	**0**	**0**	**5**	**2**	**1,218**	**36**	**205**	**1,805**	**2**

**US 17 is traditionally northbound and southbound, but in the study area, it is eastbound and westbound*

INTERSECTION VOLUME DEVELOPMENT

Coburg Rd at No Name Road
AM PEAK HOUR

Description	Coburg Rd Northbound			Coburg Rd Southbound			N/A Eastbound			No Name Road Westbound		
	Left	Through	Right	Left	Through	Right	Left	Through	Right	Left	Through	Right
Existing 2016 AM Volumes	0	3	1	21	2	0				0	0	33
Pedestrians		0			0			0			0	
Heavy Vehicle %		0.0%			2.7%						0.0%	
Peak Hour Factor		0.33			0.72						0.75	
Annual Growth Rate	2.0%	2.0%	2.0%	2.0%	2.0%	2.0%	2.0%	2.0%	2.0%	2.0%	2.0%	2.0%
Growth Factor	1.040	1.040	1.040	1.040	1.040	1.040	1.040	1.040	1.040	1.040	1.040	1.040
2018 Background Traffic	0	3	1	22	2	0	0	0	0	0	0	34
New Project Trips												
Trip Distribution IN					90%					10%		
Trip Distribution OUT		75%	25%									
Pass-by Project Trips												
Trip Distribution IN												
Trip Distribution OUT												
New Trips	0	19	7	0	12	0	0	0	0	1	0	0
Pass-By Trips	0	0	0	0	0	0	0	0	0	0	0	0
Total Project Trips	0	19	7	0	12	0	0	0	0	1	0	0
2018 Buildout Total	**0**	**22**	**8**	**22**	**14**	**0**	**0**	**0**	**0**	**1**	**0**	**34**

PM PEAK HOUR

Description	Coburg Rd Northbound			Coburg Rd Southbound			N/A Eastbound			No Name Road Westbound		
	Left	Through	Right	Left	Through	Right	Left	Through	Right	Left	Through	Right
Existing 2016 PM Volumes	0	1	3	14	7	0				0	0	48
Pedestrians		0			2						0	
Heavy Vehicle %		0.0%			2.7%			0.0%			0.0%	
Peak Hour Factor		0.50			0.82						0.75	
Annual Growth Rate	2.0%	2.0%	2.0%	2.0%	2.0%	2.0%	2.0%	2.0%	2.0%	2.0%	2.0%	2.0%
Growth Factor	1.040	1.040	1.040	1.040	1.040	1.040	1.040	1.040	1.040	1.040	1.040	1.040
2018 Background Traffic	0	1	3	15	7	0	0	0	0	0	0	50
New Project Trips												
Trip Distribution IN					90%					10%		
Trip Distribution OUT		75%	25%									
Pass-by Project Trips												
Trip Distribution IN												
Trip Distribution OUT												
New Trips	0	17	6	0	23	0	0	0	0	3	0	0
Pass-By Trips	0	0	0	0	0	0	0	0	0	0	0	0
Total Project Trips	0	17	6	0	23	0	0	0	0	3	0	0
2018 Buildout Total	**0**	**18**	**9**	**15**	**30**	**0**	**0**	**0**	**0**	**3**	**0**	**50**

INTERSECTION VOLUME DEVELOPMENT

Timmerman Dr at No Name Road
AM PEAK HOUR

Description	Timmerman Dr Northbound			Timmerman Dr Southbound			No Name Road Eastbound			N/A Westbound		
	Left	Through	Right	Left	Through	Right	Left	Through	Right	Left	Through	Right
Existing 2016 AM Volumes	23	17	0	0	4	13	2	0	21			
Pedestrians		0			1			0			0	
Heavy Vehicle %		0.0%			1.8%			2.1%			0.0%	
Peak Hour Factor		0.67			0.56			0.72				
Annual Growth Rate	2.0%	2.0%	2.0%	2.0%	2.0%	2.0%	2.0%	2.0%	2.0%	2.0%	2.0%	2.0%
Growth Factor	1.040	1.040	1.040	1.040	1.040	1.040	1.040	1.040	1.040	1.040	1.040	1.040
2018 Background Traffic	24	18	0	0	4	14	2	0	22	0	0	0
New Project Trips												
Trip Distribution IN						10%						
Trip Distribution OUT							25%					
Pass-by Project Trips												
Trip Distribution IN												
Trip Distribution OUT												
New Trips	0	0	0	0	0	1	7	0	0	0	0	0
Pass-By Trips	0	0	0	0	0	0	0	0	0	0	0	0
Total Project Trips	0	0	0	0	0	1	7	0	0	0	0	0
2018 Buildout Total	**24**	**18**	**0**	**0**	**4**	**15**	**9**	**0**	**22**	**0**	**0**	**0**

PM PEAK HOUR

Description	Timmerman Dr Northbound			Timmerman Dr Southbound			No Name Road Eastbound			N/A Westbound		
	Left	Through	Right	Left	Through	Right	Left	Through	Right	Left	Through	Right
Existing 2016 PM Volumes	13	11	0	0	10	32	27	0	15			
Pedestrians		0			3			0			0	
Heavy Vehicle %		0.0%			1.8%			2.1%			0.0%	
Peak Hour Factor		0.67			0.80			0.75				
Annual Growth Rate	2.0%	2.0%	2.0%	2.0%	2.0%	2.0%	2.0%	2.0%	2.0%	2.0%	2.0%	2.0%
Growth Factor	1.040	1.040	1.040	1.040	1.040	1.040	1.040	1.040	1.040	1.040	1.040	1.040
2018 Background Traffic	14	11	0	0	10	33	28	0	16	0	0	0
New Project Trips												
Trip Distribution IN						10%						
Trip Distribution OUT							25%					
Pass-by Project Trips												
Trip Distribution IN												
Trip Distribution OUT												
New Trips	0	0	0	0	0	3	6	0	0	0	0	0
Pass-By Trips	0	0	0	0	0	0	0	0	0	0	0	0
Total Project Trips	0	0	0	0	0	3	6	0	0	0	0	0
2018 Buildout Total	**14**	**11**	**0**	**0**	**10**	**36**	**34**	**0**	**16**	**0**	**0**	**0**

INTERSECTION VOLUME DEVELOPMENT

Nicholson St at Sothel Ave/Lyttleton Ave
AM PEAK HOUR

Description	Nicholson St. Northbound			Nicholson St. Southbound			Sothel Ave. Eastbound			Lyttleton Ave. Westbound		
	Left	Through	Right	Left	Through	Right	Left	Through	Right	Left	Through	Right
Existing 2016 AM Volumes	1	30	2	2	17	45	33	5	0	3	9	0
Pedestrians		0			1			1			0	
Heavy Vehicle %		4.9%			1.4%			0.6%			1.0%	
Peak Hour Factor		0.83			0.74			0.75			0.75	
Annual Growth Rate	2.0%	2.0%	2.0%	2.0%	2.0%	2.0%	2.0%	2.0%	2.0%	2.0%	2.0%	2.0%
Growth Factor	1.040	1.040	1.040	1.040	1.040	1.040	1.040	1.040	1.040	1.040	1.040	1.040
2018 Background Traffic	1	31	2	2	18	47	34	5	0	3	9	0
New Project Trips												
Trip Distribution IN						10%						
Trip Distribution OUT							25%					
Pass-by Project Trips												
Trip Distribution IN												
Trip Distribution OUT												
New Trips	0	0	0	0	0	1	7	0	0	0	0	0
Pass-By Trips	0	0	0	0	0	0	0	0	0	0	0	0
Total Project Trips	0	0	0	0	0	1	7	0	0	0	0	0
2018 Buildout Total	**1**	**31**	**2**	**2**	**18**	**48**	**41**	**5**	**0**	**3**	**9**	**0**

PM PEAK HOUR

Description	Nicholson St. Northbound			Nicholson St. Southbound			Sothel Ave. Eastbound			Lyttleton Ave. Westbound		
	Left	Through	Right	Left	Through	Right	Left	Through	Right	Left	Through	Right
Existing 2016 PM Volumes	0	6	3	9	26	76	27	10	1	5	12	4
Pedestrians		3			0			4			8	
Heavy Vehicle %		4.9%			1.4%			0.6%			1.0%	
Peak Hour Factor		0.38			0.93			0.75			0.66	
Annual Growth Rate	2.0%	2.0%	2.0%	2.0%	2.0%	2.0%	2.0%	2.0%	2.0%	2.0%	2.0%	2.0%
Growth Factor	1.040	1.040	1.040	1.040	1.040	1.040	1.040	1.040	1.040	1.040	1.040	1.040
2018 Background Traffic	0	6	3	9	27	79	28	10	1	5	12	4
New Project Trips												
Trip Distribution IN						10%						
Trip Distribution OUT							25%					
Pass-by Project Trips												
Trip Distribution IN												
Trip Distribution OUT												
New Trips	0	0	0	0	0	3	6	0	0	0	0	0
Pass-By Trips	0	0	0	0	0	0	0	0	0	0	0	0
Total Project Trips	0	0	0	0	0	3	6	0	0	0	0	0
2018 Buildout Total	**0**	**6**	**3**	**9**	**27**	**82**	**34**	**10**	**1**	**5**	**12**	**4**

INTERSECTION VOLUME DEVELOPMENT

Campbell St. at Yeadon Ave.
AM PEAK HOUR

Description	Campbell St. Northbound			Campbell St. Southbound			Yeadon Ave. Eastbound			N/A Westbound		
	Left	Through	Right	Left	Through	Right	Left	Through	Right	Left	Through	Right
Existing 2016 AM Volumes	74	35	0	0	45	4	32	0	198			
Pedestrians		0			0			1				
Heavy Vehicle %		0.6%			0.4%			0.2%				
Peak Hour Factor		0.70			0.51			0.77				
Annual Growth Rate	2.0%	2.0%	2.0%	2.0%	2.0%	2.0%	2.0%	2.0%	2.0%	2.0%	2.0%	2.0%
Growth Factor	1.040	1.040	1.040	1.040	1.040	1.040	1.040	1.040	1.040	1.040	1.040	1.040
2018 Background Traffic	77	36	0	0	47	4	33	0	206	0	0	0
New Project Trips												
Trip Distribution IN	5%					5%						
Trip Distribution OUT							10%		10%			
Pass-by Project Trips												
Trip Distribution IN												
Trip Distribution OUT												
New Trips	0	0	0	0	0	1	3	0	3	0	0	0
Pass-By Trips	0	0	0	0	0	0	0	0	0	0	0	0
Total Project Trips	0	0	0	0	0	1	3	0	3	0	0	0
2018 Buildout Total	**77**	**36**	**0**	**0**	**47**	**5**	**36**	**0**	**209**	**0**	**0**	**0**

PM PEAK HOUR

Description	Campbell St. Northbound			Campbell St. Southbound			Yeadon Ave. Eastbound			N/A Westbound		
	Left	Through	Right	Left	Through	Right	Left	Through	Right	Left	Through	Right
Existing 2016 PM Volumes	76	44	0	0	57	8	9	0	34			
Pedestrians		0			0			0				
Heavy Vehicle %		0.6%			0.4%			0.2%			0.0%	
Peak Hour Factor		0.58			0.65			0.72				
Annual Growth Rate	2.0%	2.0%	2.0%	2.0%	2.0%	2.0%	2.0%	2.0%	2.0%	2.0%	2.0%	2.0%
Growth Factor	1.040	1.040	1.040	1.040	1.040	1.040	1.040	1.040	1.040	1.040	1.040	1.040
2018 Background Traffic	79	46	0	0	59	8	9	0	35	0	0	0
New Project Trips												
Trip Distribution IN	5%					5%						
Trip Distribution OUT							10%		10%			
Pass-by Project Trips												
Trip Distribution IN												
Trip Distribution OUT												
New Trips	2	0	0	0	0	1	2	0	2	0	0	0
Pass-By Trips	0	0	0	0	0	0	0	0	0	0	0	0
Total Project Trips	2	0	0	0	0	1	2	0	2	0	0	0
2018 Buildout Total	**81**	**46**	**0**	**0**	**59**	**9**	**11**	**0**	**37**	**0**	**0**	**0**

Movement	EBT	EBR	WBL	WBT	NBL	NBR
Lane Configurations						
Traffic Volume (veh/h)	1624	31	73	1250	106	57
Future Volume (veh/h)	1624	31	73	1250	106	57
Number	2	12	1	6	7	14
Initial Q (Qb), veh	0	0	0	0	0	0
Ped-Bike Adj(A_pbT)		1.00	1.00		1.00	1.00
Parking Bus, Adj	1.00	1.00	1.00	1.00	1.00	1.00
Adj Sat Flow, veh/h/ln	1845	1900	1863	1863	1863	1863
Adj Flow Rate, veh/h	1804	34	77	1316	131	70
Adj No. of Lanes	2	0	1	2	1	1
Peak Hour Factor	0.90	0.90	0.95	0.95	0.81	0.81
Percent Heavy Veh, %	3	3	2	2	2	2
Cap, veh/h	2617	49	230	2903	160	143
Arrive On Green	0.74	0.74	0.03	0.82	0.09	0.09
Sat Flow, veh/h	3611	66	1774	3632	1774	1583
Grp Volume(v), veh/h	896	942	77	1316	131	70
Grp Sat Flow(s),veh/h/ln	1752	1833	1774	1770	1774	1583
Q Serve(g_s), s	37.6	38.0	1.3	14.9	10.2	5.9
Cycle Q Clear(g_c), s	37.6	38.0	1.3	14.9	10.2	5.9
Prop In Lane		0.04	1.00		1.00	1.00
Lane Grp Cap(c), veh/h	1303	1363	230	2903	160	143
V/C Ratio(X)	0.69	0.69	0.33	0.45	0.82	0.49
Avail Cap(c_a), veh/h	1303	1363	411	2903	367	328
HCM Platoon Ratio	1.00	1.00	1.00	1.00	1.00	1.00
Upstream Filter(I)	1.00	1.00	1.00	1.00	1.00	1.00
Uniform Delay (d), s/veh	9.4	9.5	11.4	3.6	62.5	60.6
Incr Delay (d2), s/veh	3.0	2.9	0.8	0.5	9.7	2.6
Initial Q Delay(d3),s/veh	0.0	0.0	0.0	0.0	0.0	0.0
%ile BackOfQ(50%),veh/ln	19.0	20.2	1.3	7.3	5.4	2.7
LnGrp Delay(d),s/veh	12.4	12.4	12.2	4.1	72.2	63.2
LnGrp LOS	B	B	B	A	E	E
Approach Vol, veh/h	1838			1393	201	
Approach Delay, s/veh	12.4			4.6	69.1	
Approach LOS	B			A	E	

Timer	1	2	3	4	5	6	7	8
Assigned Phs	1	2		4		6		
Phs Duration (G+Y+Rc), s	10.7	110.6		18.7		121.3		
Change Period (Y+Rc), s	6.0	6.5		6.0		6.5		
Max Green Setting (Gmax), s	19.0	73.5		29.0		98.5		
Max Q Clear Time (g_c+I1), s	3.3	40.0		12.2		16.9		
Green Ext Time (p_c), s	0.1	29.5		0.5		61.2		

Intersection Summary	
HCM 2010 Ctrl Delay	12.5
HCM 2010 LOS	B

Intersection	
Int Delay, s/veh	6.7

Movement	WBL	WBR	NBT	NBR	SBL	SBT
Lane Configurations						
Traffic Vol, veh/h	0	33	3	1	21	2
Future Vol, veh/h	0	33	3	1	21	2
Conflicting Peds, #/hr	0	0	0	0	0	0
Sign Control	Stop	Stop	Free	Free	Free	Free
RT Channelized	-	None	-	None	-	None
Storage Length	0	-	-	-	-	-
Veh in Median Storage, #	0	-	0	-	-	0
Grade, %	0	-	0	-	-	0
Peak Hour Factor	75	75	33	33	72	72
Heavy Vehicles, %	2	2	2	2	3	3
Mvmt Flow	0	44	9	3	29	3

Major/Minor	Minor1		Major1		Major2	
Conflicting Flow All	72	11	0	0	12	0
Stage 1	11	-	-	-	-	-
Stage 2	61	-	-	-	-	-
Critical Hdwy	6.42	6.22	-	-	4.13	-
Critical Hdwy Stg 1	5.42	-	-	-	-	-
Critical Hdwy Stg 2	5.42	-	-	-	-	-
Follow-up Hdwy	3.518	3.318	-	-	2.227	-
Pot Cap-1 Maneuver	932	1070	-	-	1600	-
Stage 1	1012	-	-	-	-	-
Stage 2	962	-	-	-	-	-
Platoon blocked, %			-	-		-
Mov Cap-1 Maneuver	915	1070	-	-	1600	-
Mov Cap-2 Maneuver	915	-	-	-	-	-
Stage 1	1012	-	-	-	-	-
Stage 2	945	-	-	-	-	-

Approach	WB	NB	SB
HCM Control Delay, s	8.5	0	6.7
HCM LOS	A		

Minor Lane/Major Mvmt	NBT	NBR	WBLn1	SBL	SBT
Capacity (veh/h)	-	-	1070	1600	-
HCM Lane V/C Ratio	-	-	0.041	0.018	-
HCM Control Delay (s)	-	-	8.5	7.3	0
HCM Lane LOS	-	-	A	A	A
HCM 95th %tile Q(veh)	-	-	0.1	0.1	-

Intersection	
Int Delay, s/veh	4.3

Movement	EBL	EBR	NBL	NBT	SBT	SBR
Lane Configurations						
Traffic Vol, veh/h	2	21	23	17	4	13
Future Vol, veh/h	2	21	23	17	4	13
Conflicting Peds, #/hr	0	0	1	0	0	1
Sign Control	Stop	Stop	Free	Free	Free	Free
RT Channelized	-	None	-	None	-	None
Storage Length	0	-	-	-	-	-
Veh in Median Storage, #	0	-	-	0	0	-
Grade, %	0	-	-	0	0	-
Peak Hour Factor	72	72	67	67	56	56
Heavy Vehicles, %	2	2	2	2	2	2
Mvmt Flow	3	29	34	25	7	23

Major/Minor	Minor2		Major1		Major2	
Conflicting Flow All	114	20	31	0	-	0
Stage 1	20	-	-	-	-	-
Stage 2	94	-	-	-	-	-
Critical Hdwy	7.12	6.22	4.12	-	-	-
Critical Hdwy Stg 1	6.12	-	-	-	-	-
Critical Hdwy Stg 2	6.12	-	-	-	-	-
Follow-up Hdwy	3.518	3.318	2.218	-	-	-
Pot Cap-1 Maneuver	863	1058	1582	-	-	-
Stage 1	999	-	-	-	-	-
Stage 2	913	-	-	-	-	-
Platoon blocked, %				-	-	-
Mov Cap-1 Maneuver	848	1057	1582	-	-	-
Mov Cap-2 Maneuver	848	-	-	-	-	-
Stage 1	976	-	-	-	-	-
Stage 2	893	-	-	-	-	-

Approach	EB	NB	SB
HCM Control Delay, s	8.6	4.2	0
HCM LOS	A		

Minor Lane/Major Mvmt	NBL	NBT	EBLn1	SBT	SBR
Capacity (veh/h)	1582	-	1035	-	-
HCM Lane V/C Ratio	0.022	-	0.031	-	-
HCM Control Delay (s)	7.3	0	8.6	-	-
HCM Lane LOS	A	A	A	-	-
HCM 95th %tile Q(veh)	0.1	-	0.1	-	-

Intersection	
Int Delay, s/veh	3.4

Movement	EBL	EBT	EBR	WBL	WBT	WBR	NBL	NBT	NBR	SBL	SBT	SBR
Lane Configurations												
Traffic Vol, veh/h	33	5	0	3	9	0	1	30	2	2	17	45
Future Vol, veh/h	33	5	0	3	9	0	1	30	2	2	17	45
Conflicting Peds, #/hr	0	0	1	1	0	0	1	0	0	0	0	1
Sign Control	Stop	Stop	Stop	Stop	Stop	Stop	Free	Free	Free	Free	Free	Free
RT Channelized	-	-	None	-	-	None	-	-	None	-	-	None
Storage Length	-	-	-	-	-	-	-	-	-	-	-	-
Veh in Median Storage, #	-	0	-	-	0	-	-	0	-	-	0	-
Grade, %	-	0	-	-	0	-	-	0	-	-	0	-
Peak Hour Factor	75	75	75	75	75	75	83	83	83	74	74	74
Heavy Vehicles, %	2	2	2	2	2	2	5	5	5	2	2	2
Mvmt Flow	44	7	0	4	12	0	1	36	2	3	23	61

Major/Minor	Minor2			Minor1			Major1			Major2		
Conflicting Flow All	106	101	55	103	130	37	85	0	0	39	0	0
Stage 1	60	60	-	40	40	-	-	-	-	-	-	-
Stage 2	46	41	-	63	90	-	-	-	-	-	-	-
Critical Hdwy	7.12	6.52	6.22	7.12	6.52	6.22	4.15	-	-	4.12	-	-
Critical Hdwy Stg 1	6.12	5.52	-	6.12	5.52	-	-	-	-	-	-	-
Critical Hdwy Stg 2	6.12	5.52	-	6.12	5.52	-	-	-	-	-	-	-
Follow-up Hdwy	3.518	4.018	3.318	3.518	4.018	3.318	2.245	-	-	2.218	-	-
Pot Cap-1 Maneuver	873	789	1012	877	761	1035	1493	-	-	1571	-	-
Stage 1	951	845	-	975	862	-	-	-	-	-	-	-
Stage 2	968	861	-	948	820	-	-	-	-	-	-	-
Platoon blocked, %								-	-		-	-
Mov Cap-1 Maneuver	860	786	1010	869	758	1035	1492	-	-	1571	-	-
Mov Cap-2 Maneuver	860	786	-	869	758	-	-	-	-	-	-	-
Stage 1	949	843	-	974	861	-	-	-	-	-	-	-
Stage 2	954	860	-	938	818	-	-	-	-	-	-	-

Approach	EB	WB	NB	SB
HCM Control Delay, s	9.5	9.7	0.2	0.2
HCM LOS	A	A		

Minor Lane/Major Mvmt	NBL	NBT	NBR	EBLn1	WBLn1	SBL	SBT	SBR
Capacity (veh/h)	1492	-	-	849	783	1571	-	-
HCM Lane V/C Ratio	0.001	-	-	0.06	0.02	0.002	-	-
HCM Control Delay (s)	7.4	0	-	9.5	9.7	7.3	0	-
HCM Lane LOS	A	A	-	A	A	A	A	-
HCM 95th %tile Q(veh)	0	-	-	0.2	0.1	0	-	-

Intersection	
Intersection Delay, s/veh	9
Intersection LOS	A

Movement	EBU	EBL	EBR	NBU	NBL	NBT	SBU	SBT	SBR
Lane Configurations									
Traffic Vol, veh/h	0	32	198	0	74	35	0	45	4
Future Vol, veh/h	0	32	198	0	74	35	0	45	4
Peak Hour Factor	0.92	0.77	0.77	0.92	0.70	0.70	0.92	0.51	0.51
Heavy Vehicles, %	2	2	2	2	2	2	2	2	2
Mvmt Flow	0	42	257	0	106	50	0	88	8
Number of Lanes	0	1	0	0	0	1	0	1	0

Approach	EB	NB	SB
Opposing Approach		SB	NB
Opposing Lanes	0	1	1
Conflicting Approach Left	SB	EB	
Conflicting Lanes Left	1	1	0
Conflicting Approach Right	NB		EB
Conflicting Lanes Right	1	0	1
HCM Control Delay	9.1	9.1	8.4
HCM LOS	A	A	A

Lane	NBLn1	EBLn1	SBLn1
Vol Left, %	68%	14%	0%
Vol Thru, %	32%	0%	92%
Vol Right, %	0%	86%	8%
Sign Control	Stop	Stop	Stop
Traffic Vol by Lane	109	230	49
LT Vol	74	32	0
Through Vol	35	0	45
RT Vol	0	198	4
Lane Flow Rate	156	299	96
Geometry Grp	1	1	1
Degree of Util (X)	0.209	0.337	0.126
Departure Headway (Hd)	4.821	4.057	4.714
Convergence, Y/N	Yes	Yes	Yes
Cap	743	887	759
Service Time	2.859	2.079	2.754
HCM Lane V/C Ratio	0.21	0.337	0.126
HCM Control Delay	9.1	9.1	8.4
HCM Lane LOS	A	A	A
HCM 95th-tile Q	0.8	1.5	0.4

Movement	EBT	EBR	WBL	WBT	NBL	NBR
Lane Configurations						
Traffic Volume (veh/h)	1171	22	187	1735	232	161
Future Volume (veh/h)	1171	22	187	1735	232	161
Number	2	12	1	6	7	14
Initial Q (Qb), veh	0	0	0	0	0	0
Ped-Bike Adj(A_pbT)		1.00	1.00		1.00	1.00
Parking Bus, Adj	1.00	1.00	1.00	1.00	1.00	1.00
Adj Sat Flow, veh/h/ln	1863	1900	1863	1863	1863	1863
Adj Flow Rate, veh/h	1233	23	197	1826	249	173
Adj No. of Lanes	2	0	1	2	1	1
Peak Hour Factor	0.95	0.95	0.95	0.95	0.93	0.93
Percent Heavy Veh, %	2	2	2	2	2	2
Cap, veh/h	2339	44	353	2664	280	250
Arrive On Green	0.66	0.66	0.05	0.75	0.16	0.16
Sat Flow, veh/h	3647	66	1774	3632	1774	1583
Grp Volume(v), veh/h	614	642	197	1826	249	173
Grp Sat Flow(s),veh/h/ln	1770	1851	1774	1770	1774	1583
Q Serve(g_s), s	25.4	25.4	4.8	36.9	19.2	14.5
Cycle Q Clear(g_c), s	25.4	25.4	4.8	36.9	19.2	14.5
Prop In Lane		0.04	1.00		1.00	1.00
Lane Grp Cap(c), veh/h	1165	1218	353	2664	280	250
V/C Ratio(X)	0.53	0.53	0.56	0.69	0.89	0.69
Avail Cap(c_a), veh/h	1165	1218	502	2664	367	328
HCM Platoon Ratio	1.00	1.00	1.00	1.00	1.00	1.00
Upstream Filter(I)	1.00	1.00	1.00	1.00	1.00	1.00
Uniform Delay (d), s/veh	12.5	12.5	10.9	8.8	57.7	55.7
Incr Delay (d2), s/veh	1.7	1.6	1.4	1.5	18.5	4.1
Initial Q Delay(d3),s/veh	0.0	0.0	0.0	0.0	0.0	0.0
%ile BackOfQ(50%),veh/ln	12.8	13.4	2.8	18.3	10.8	6.6
LnGrp Delay(d),s/veh	14.2	14.2	12.2	10.3	76.2	59.8
LnGrp LOS	B	B	B	B	E	E
Approach Vol, veh/h	1256			2023	422	
Approach Delay, s/veh	14.2			10.5	69.5	
Approach LOS	B			B	E	

Timer	1	2	3	4	5	6	7	8
Assigned Phs	1	2		4		6		
Phs Duration (G+Y+Rc), s	13.2	98.6		28.1		111.9		
Change Period (Y+Rc), s	6.0	6.5		6.0		6.5		
Max Green Setting (Gmax), s	19.0	73.5		29.0		98.5		
Max Q Clear Time (g_c+I1), s	6.8	27.4		21.2		38.9		
Green Ext Time (p_c), s	0.4	37.9		0.9		46.6		

Intersection Summary	
HCM 2010 Ctrl Delay	18.5
HCM 2010 LOS	B

Intersection	
Int Delay, s/veh	6.9

Movement	WBL	WBR	NBT	NBR	SBL	SBT
Lane Configurations						
Traffic Vol, veh/h	0	48	1	3	14	7
Future Vol, veh/h	0	48	1	3	14	7
Conflicting Peds, #/hr	0	0	0	0	0	0
Sign Control	Stop	Stop	Free	Free	Free	Free
RT Channelized	-	None	-	None	-	None
Storage Length	0	-	-	-	-	-
Veh in Median Storage, #	0	-	0	-	-	0
Grade, %	0	-	0	-	-	0
Peak Hour Factor	75	75	50	50	82	82
Heavy Vehicles, %	2	2	2	2	3	3
Mvmt Flow	0	64	2	6	17	9

Major/Minor	Minor1		Major1		Major2	
Conflicting Flow All	48	5	0	0	8	0
Stage 1	5	-	-	-	-	-
Stage 2	43	-	-	-	-	-
Critical Hdwy	6.42	6.22	-	-	4.13	-
Critical Hdwy Stg 1	5.42	-	-	-	-	-
Critical Hdwy Stg 2	5.42	-	-	-	-	-
Follow-up Hdwy	3.518	3.318	-	-	2.227	-
Pot Cap-1 Maneuver	962	1078	-	-	1606	-
Stage 1	1018	-	-	-	-	-
Stage 2	979	-	-	-	-	-
Platoon blocked, %			-	-		-
Mov Cap-1 Maneuver	951	1078	-	-	1606	-
Mov Cap-2 Maneuver	951	-	-	-	-	-
Stage 1	1018	-	-	-	-	-
Stage 2	968	-	-	-	-	-

Approach	WB	NB	SB
HCM Control Delay, s	8.6	0	4.8
HCM LOS	A		

Minor Lane/Major Mvmt	NBT	NBR	WBLn1	SBL	SBT
Capacity (veh/h)	-	-	1078	1606	-
HCM Lane V/C Ratio	-	-	0.059	0.011	-
HCM Control Delay (s)	-	-	8.6	7.3	0
HCM Lane LOS	-	-	A	A	A
HCM 95th %tile Q(veh)	-	-	0.2	0	-

Intersection	
Int Delay, s/veh	4.5

Movement	EBL	EBR	NBL	NBT	SBT	SBR
Lane Configurations						
Traffic Vol, veh/h	27	15	13	11	10	32
Future Vol, veh/h	27	15	13	11	10	32
Conflicting Peds, #/hr	0	0	3	0	0	3
Sign Control	Stop	Stop	Free	Free	Free	Free
RT Channelized	-	None	-	None	-	None
Storage Length	0	-	-	-	-	-
Veh in Median Storage, #	0	-	-	0	0	-
Grade, %	0	-	-	0	0	-
Peak Hour Factor	75	75	67	67	80	80
Heavy Vehicles, %	2	2	2	2	2	2
Mvmt Flow	36	20	19	16	13	40

Major/Minor	Minor2		Major1		Major2	
Conflicting Flow All	91	36	56	0	-	0
Stage 1	36	-	-	-	-	-
Stage 2	55	-	-	-	-	-
Critical Hdwy	6.42	6.22	4.12	-	-	-
Critical Hdwy Stg 1	5.42	-	-	-	-	-
Critical Hdwy Stg 2	5.42	-	-	-	-	-
Follow-up Hdwy	3.518	3.318	2.218	-	-	-
Pot Cap-1 Maneuver	909	1037	1549	-	-	-
Stage 1	986	-	-	-	-	-
Stage 2	968	-	-	-	-	-
Platoon blocked, %				-	-	-
Mov Cap-1 Maneuver	893	1034	1549	-	-	-
Mov Cap-2 Maneuver	893	-	-	-	-	-
Stage 1	983	-	-	-	-	-
Stage 2	954	-	-	-	-	-

Approach	EB	NB	SB
HCM Control Delay, s	9.1	4	0
HCM LOS	A		

Minor Lane/Major Mvmt	NBL	NBT	EBLn1	SBT	SBR
Capacity (veh/h)	1549	-	939	-	-
HCM Lane V/C Ratio	0.013	-	0.06	-	-
HCM Control Delay (s)	7.4	0	9.1	-	-
HCM Lane LOS	A	A	A	-	-
HCM 95th %tile Q(veh)	0	-	0.2	-	-

Intersection	
Int Delay, s/veh	5.5

Movement	EBL	EBT	EBR	WBL	WBT	WBR	NBL	NBT	NBR	SBL	SBT	SBR
Lane Configurations												
Traffic Vol, veh/h	27	10	1	5	12	4	0	6	3	9	26	76
Future Vol, veh/h	27	10	1	5	12	4	0	6	3	9	26	76
Conflicting Peds, #/hr	8	0	4	4	0	8	0	0	3	3	0	0
Sign Control	Stop	Stop	Stop	Stop	Stop	Stop	Free	Free	Free	Free	Free	Free
RT Channelized	-	-	None	-	-	None	-	-	None	-	-	None
Storage Length	-	-	-	-	-	-	-	-	-	-	-	-
Veh in Median Storage, #	-	0	-	-	0	-	-	0	-	-	0	-
Grade, %	-	0	-	-	0	-	-	0	-	-	0	-
Peak Hour Factor	25	75	75	66	66	66	38	38	38	93	93	93
Heavy Vehicles, %	2	2	2	2	2	2	5	5	5	2	2	2
Mvmt Flow	108	13	1	8	18	6	0	16	8	10	28	82

Major/Minor	Minor2			Minor1			Major1			Major2		
Conflicting Flow All	128	115	73	123	152	31	110	0	0	27	0	0
Stage 1	88	88	-	23	23	-	-	-	-	-	-	-
Stage 2	40	27	-	100	129	-	-	-	-	-	-	-
Critical Hdwy	7.12	6.52	6.22	7.12	6.52	6.22	4.15	-	-	4.12	-	-
Critical Hdwy Stg 1	6.12	5.52	-	6.12	5.52	-	-	-	-	-	-	-
Critical Hdwy Stg 2	6.12	5.52	-	6.12	5.52	-	-	-	-	-	-	-
Follow-up Hdwy	3.518	4.018	3.318	3.518	4.018	3.318	2.245	-	-	2.218	-	-
Pot Cap-1 Maneuver	845	775	989	852	740	1043	1462	-	-	1587	-	-
Stage 1	920	822	-	995	876	-	-	-	-	-	-	-
Stage 2	975	873	-	906	789	-	-	-	-	-	-	-
Platoon blocked, %								-	-		-	-
Mov Cap-1 Maneuver	814	767	985	830	733	1032	1456	-	-	1575	-	-
Mov Cap-2 Maneuver	814	767	-	830	733	-	-	-	-	-	-	-
Stage 1	920	816	-	992	873	-	-	-	-	-	-	-
Stage 2	942	871	-	880	783	-	-	-	-	-	-	-

Approach	EB	WB	NB	SB
HCM Control Delay, s	10.2	9.7	0	0.6
HCM LOS	B	A		

Minor Lane/Major Mvmt	NBL	NBT	NBR	EBLn1	WBLn1	SBL	SBT	SBR
Capacity (veh/h)	1456	-	-	810	799	1575	-	-
HCM Lane V/C Ratio	-	-	-	0.151	0.04	0.006	-	-
HCM Control Delay (s)	0	-	-	10.2	9.7	7.3	0	-
HCM Lane LOS	A	-	-	B	A	A	A	-
HCM 95th %tile Q(veh)	0	-	-	0.5	0.1	0	-	-

Intersection	
Intersection Delay, s/veh	8.2
Intersection LOS	A

Movement	EBU	EBL	EBR	NBU	NBL	NBT	SBU	SBT	SBR
Lane Configurations									
Traffic Vol, veh/h	0	9	34	0	76	44	0	57	8
Future Vol, veh/h	0	9	34	0	76	44	0	57	8
Peak Hour Factor	0.92	0.72	0.72	0.92	0.58	0.58	0.92	0.65	0.65
Heavy Vehicles, %	2	2	2	2	2	2	2	2	2
Mvmt Flow	0	13	47	0	131	76	0	88	12
Number of Lanes	0	1	0	0	0	1	0	1	0

Approach	EB	NB	SB
Opposing Approach		SB	NB
Opposing Lanes	0	1	1
Conflicting Approach Left	SB	EB	
Conflicting Lanes Left	1	1	0
Conflicting Approach Right	NB		EB
Conflicting Lanes Right	1	0	1
HCM Control Delay	7.5	8.7	7.7
HCM LOS	A	A	A

Lane	NBLn1	EBLn1	SBLn1
Vol Left, %	63%	21%	0%
Vol Thru, %	37%	0%	88%
Vol Right, %	0%	79%	12%
Sign Control	Stop	Stop	Stop
Traffic Vol by Lane	120	43	65
LT Vol	76	9	0
Through Vol	44	0	57
RT Vol	0	34	8
Lane Flow Rate	207	60	100
Geometry Grp	1	1	1
Degree of Util (X)	0.244	0.069	0.114
Departure Headway (Hd)	4.242	4.179	4.122
Convergence, Y/N	Yes	Yes	Yes
Cap	842	862	857
Service Time	2.295	2.179	2.206
HCM Lane V/C Ratio	0.246	0.07	0.117
HCM Control Delay	8.7	7.5	7.7
HCM Lane LOS	A	A	A
HCM 95th-tile Q	1	0.2	0.4

Movement	EBT	EBR	WBL	WBT	NBL	NBR
Lane Configurations						
Traffic Volume (veh/h)	1690	32	76	1301	110	59
Future Volume (veh/h)	1690	32	76	1301	110	59
Number	2	12	1	6	7	14
Initial Q (Qb), veh	0	0	0	0	0	0
Ped-Bike Adj(A_pbT)		1.00	1.00		1.00	1.00
Parking Bus, Adj	1.00	1.00	1.00	1.00	1.00	1.00
Adj Sat Flow, veh/h/ln	1845	1900	1863	1863	1863	1863
Adj Flow Rate, veh/h	1878	36	80	1369	136	73
Adj No. of Lanes	2	0	1	2	1	1
Peak Hour Factor	0.90	0.90	0.95	0.95	0.81	0.81
Percent Heavy Veh, %	3	3	2	2	2	2
Cap, veh/h	2605	50	215	2893	166	148
Arrive On Green	0.74	0.74	0.03	0.82	0.09	0.09
Sat Flow, veh/h	3610	67	1774	3632	1774	1583
Grp Volume(v), veh/h	933	981	80	1369	136	73
Grp Sat Flow(s),veh/h/ln	1752	1833	1774	1770	1774	1583
Q Serve(g_s), s	41.3	41.9	1.4	16.1	10.5	6.1
Cycle Q Clear(g_c), s	41.3	41.9	1.4	16.1	10.5	6.1
Prop In Lane		0.04	1.00		1.00	1.00
Lane Grp Cap(c), veh/h	1298	1357	215	2893	166	148
V/C Ratio(X)	0.72	0.72	0.37	0.47	0.82	0.49
Avail Cap(c_a), veh/h	1298	1357	395	2893	367	328
HCM Platoon Ratio	1.00	1.00	1.00	1.00	1.00	1.00
Upstream Filter(I)	1.00	1.00	1.00	1.00	1.00	1.00
Uniform Delay (d), s/veh	10.1	10.2	13.7	3.8	62.3	60.3
Incr Delay (d2), s/veh	3.5	3.4	1.1	0.6	9.7	2.5
Initial Q Delay(d3),s/veh	0.0	0.0	0.0	0.0	0.0	0.0
%ile BackOfQ(50%),veh/ln	20.9	22.3	1.5	8.0	5.6	2.8
LnGrp Delay(d),s/veh	13.5	13.5	14.8	4.4	72.0	62.9
LnGrp LOS	B	B	B	A	E	E
Approach Vol, veh/h	1914			1449	209	
Approach Delay, s/veh	13.5			4.9	68.8	
Approach LOS	B			A	E	

Timer	1	2	3	4	5	6	7	8
Assigned Phs	1	2		4		6		
Phs Duration (G+Y+Rc), s	10.8	110.2		19.1		120.9		
Change Period (Y+Rc), s	6.0	6.5		6.0		6.5		
Max Green Setting (Gmax), s	19.0	73.5		29.0		98.5		
Max Q Clear Time (g_c+I1), s	3.4	43.9		12.5		18.1		
Green Ext Time (p_c), s	0.1	27.0		0.5		63.7		

Intersection Summary	
HCM 2010 Ctrl Delay	13.3
HCM 2010 LOS	B

Intersection	
Int Delay, s/veh	6.7

Movement	WBL	WBR	NBT	NBR	SBL	SBT
Lane Configurations						
Traffic Vol, veh/h	0	34	3	1	22	2
Future Vol, veh/h	0	34	3	1	22	2
Conflicting Peds, #/hr	0	0	0	0	0	0
Sign Control	Stop	Stop	Free	Free	Free	Free
RT Channelized	-	None	-	None	-	None
Storage Length	0	-	-	-	-	-
Veh in Median Storage, #	0	-	0	-	-	0
Grade, %	0	-	0	-	-	0
Peak Hour Factor	75	75	33	33	72	72
Heavy Vehicles, %	2	2	2	2	3	3
Mvmt Flow	0	45	9	3	31	3

Major/Minor	Minor1		Major1		Major2	
Conflicting Flow All	75	11	0	0	12	0
Stage 1	11	-	-	-	-	-
Stage 2	64	-	-	-	-	-
Critical Hdwy	6.42	6.22	-	-	4.13	-
Critical Hdwy Stg 1	5.42	-	-	-	-	-
Critical Hdwy Stg 2	5.42	-	-	-	-	-
Follow-up Hdwy	3.518	3.318	-	-	2.227	-
Pot Cap-1 Maneuver	928	1070	-	-	1600	-
Stage 1	1012	-	-	-	-	-
Stage 2	959	-	-	-	-	-
Platoon blocked, %			-	-		-
Mov Cap-1 Maneuver	910	1070	-	-	1600	-
Mov Cap-2 Maneuver	910	-	-	-	-	-
Stage 1	1012	-	-	-	-	-
Stage 2	941	-	-	-	-	-

Approach	WB	NB	SB
HCM Control Delay, s	8.5	0	6.7
HCM LOS	A		

Minor Lane/Major Mvmt	NBT	NBR	WBLn1	SBL	SBT
Capacity (veh/h)	-	-	1070	1600	-
HCM Lane V/C Ratio	-	-	0.042	0.019	-
HCM Control Delay (s)	-	-	8.5	7.3	0
HCM Lane LOS	-	-	A	A	A
HCM 95th %tile Q(veh)	-	-	0.1	0.1	-

Intersection	
Int Delay, s/veh	4.3

Movement	EBL	EBR	NBL	NBT	SBT	SBR
Lane Configurations						
Traffic Vol, veh/h	2	22	24	18	4	14
Future Vol, veh/h	2	22	24	18	4	14
Conflicting Peds, #/hr	0	0	1	0	0	1
Sign Control	Stop	Stop	Free	Free	Free	Free
RT Channelized	-	None	-	None	-	None
Storage Length	0	-	-	-	-	-
Veh in Median Storage, #	0	-	-	0	0	-
Grade, %	0	-	-	0	0	-
Peak Hour Factor	72	72	67	67	56	56
Heavy Vehicles, %	2	2	2	2	2	2
Mvmt Flow	3	31	36	27	7	25

Major/Minor	Minor2		Major1		Major2	
Conflicting Flow All	120	21	33	0	-	0
Stage 1	21	-	-	-	-	-
Stage 2	99	-	-	-	-	-
Critical Hdwy	6.42	6.22	4.12	-	-	-
Critical Hdwy Stg 1	5.42	-	-	-	-	-
Critical Hdwy Stg 2	5.42	-	-	-	-	-
Follow-up Hdwy	3.518	3.318	2.218	-	-	-
Pot Cap-1 Maneuver	876	1056	1579	-	-	-
Stage 1	1002	-	-	-	-	-
Stage 2	925	-	-	-	-	-
Platoon blocked, %				-	-	-
Mov Cap-1 Maneuver	854	1055	1579	-	-	-
Mov Cap-2 Maneuver	854	-	-	-	-	-
Stage 1	1001	-	-	-	-	-
Stage 2	903	-	-	-	-	-

Approach	EB	NB	SB
HCM Control Delay, s	8.6	4.2	0
HCM LOS	A		

Minor Lane/Major Mvmt	NBL	NBT	EBLn1	SBT	SBR
Capacity (veh/h)	1579	-	1035	-	-
HCM Lane V/C Ratio	0.023	-	0.032	-	-
HCM Control Delay (s)	7.3	0	8.6	-	-
HCM Lane LOS	A	A	A	-	-
HCM 95th %tile Q(veh)	0.1	-	0.1	-	-

Intersection	
Int Delay, s/veh	3.4

Movement	EBL	EBT	EBR	WBL	WBT	WBR	NBL	NBT	NBR	SBL	SBT	SBR
Lane Configurations												
Traffic Vol, veh/h	34	5	0	3	9	0	1	31	2	2	18	47
Future Vol, veh/h	34	5	0	3	9	0	1	31	2	2	18	47
Conflicting Peds, #/hr	0	0	1	1	0	0	1	0	0	0	0	1
Sign Control	Stop	Stop	Stop	Stop	Stop	Stop	Free	Free	Free	Free	Free	Free
RT Channelized	-	-	None	-	-	None	-	-	None	-	-	None
Storage Length	-	-	-	-	-	-	-	-	-	-	-	-
Veh in Median Storage, #	-	0	-	-	0	-	-	0	-	-	0	-
Grade, %	-	0	-	-	0	-	-	0	-	-	0	-
Peak Hour Factor	75	75	75	75	75	75	83	83	83	74	74	74
Heavy Vehicles, %	2	2	2	2	2	2	5	5	5	2	2	2
Mvmt Flow	45	7	0	4	12	0	1	37	2	3	24	64

Major/Minor	Minor2			Minor1			Major1			Major2		
Conflicting Flow All	109	104	58	107	135	39	89	0	0	40	0	0
Stage 1	62	62	-	41	41	-	-	-	-	-	-	-
Stage 2	47	42	-	66	94	-	-	-	-	-	-	-
Critical Hdwy	7.12	6.52	6.22	7.12	6.52	6.22	4.15	-	-	4.12	-	-
Critical Hdwy Stg 1	6.12	5.52	-	6.12	5.52	-	-	-	-	-	-	-
Critical Hdwy Stg 2	6.12	5.52	-	6.12	5.52	-	-	-	-	-	-	-
Follow-up Hdwy	3.518	4.018	3.318	3.518	4.018	3.318	2.245	-	-	2.218	-	-
Pot Cap-1 Maneuver	870	786	1008	872	756	1033	1488	-	-	1570	-	-
Stage 1	949	843	-	974	861	-	-	-	-	-	-	-
Stage 2	967	860	-	945	817	-	-	-	-	-	-	-
Platoon blocked, %								-	-		-	-
Mov Cap-1 Maneuver	857	783	1006	864	753	1033	1487	-	-	1570	-	-
Mov Cap-2 Maneuver	857	783	-	864	753	-	-	-	-	-	-	-
Stage 1	947	841	-	973	860	-	-	-	-	-	-	-
Stage 2	953	859	-	935	815	-	-	-	-	-	-	-

Approach	EB	WB	NB	SB
HCM Control Delay, s	9.5	9.7	0.2	0.2
HCM LOS	A	A		

Minor Lane/Major Mvmt	NBL	NBT	NBR	EBLn1	WBLn1	SBL	SBT	SBR
Capacity (veh/h)	1487	-	-	847	778	1570	-	-
HCM Lane V/C Ratio	0.001	-	-	0.061	0.021	0.002	-	-
HCM Control Delay (s)	7.4	0	-	9.5	9.7	7.3	0	-
HCM Lane LOS	A	A	-	A	A	A	A	-
HCM 95th %tile Q(veh)	0	-	-	0.2	0.1	0	-	-

Intersection	
Intersection Delay, s/veh	9.2
Intersection LOS	A

Movement	EBU	EBL	EBR	NBU	NBL	NBT	SBU	SBT	SBR
Lane Configurations									
Traffic Vol, veh/h	0	33	206	0	77	36	0	47	4
Future Vol, veh/h	0	33	206	0	77	36	0	47	4
Peak Hour Factor	0.92	0.77	0.77	0.92	0.70	0.70	0.92	0.51	0.51
Heavy Vehicles, %	2	2	2	2	2	2	2	2	2
Mvmt Flow	0	43	268	0	110	51	0	92	8
Number of Lanes	0	1	0	0	0	1	0	1	0

Approach	EB	NB	SB
Opposing Approach		SB	NB
Opposing Lanes	0	1	1
Conflicting Approach Left	SB	EB	
Conflicting Lanes Left	1	1	0
Conflicting Approach Right	NB		EB
Conflicting Lanes Right	1	0	1
HCM Control Delay	9.3	9.3	8.5
HCM LOS	A	A	A

Lane	NBLn1	EBLn1	SBLn1
Vol Left, %	68%	14%	0%
Vol Thru, %	32%	0%	92%
Vol Right, %	0%	86%	8%
Sign Control	Stop	Stop	Stop
Traffic Vol by Lane	113	239	51
LT Vol	77	33	0
Through Vol	36	0	47
RT Vol	0	206	4
Lane Flow Rate	161	310	100
Geometry Grp	1	1	1
Degree of Util (X)	0.218	0.352	0.132
Departure Headway (Hd)	4.856	4.084	4.753
Convergence, Y/N	Yes	Yes	Yes
Cap	738	882	752
Service Time	2.896	2.106	2.795
HCM Lane V/C Ratio	0.218	0.351	0.133
HCM Control Delay	9.3	9.3	8.5
HCM Lane LOS	A	A	A
HCM 95th-tile Q	0.8	1.6	0.5

Movement	EBT	EBR	WBL	WBT	NBL	NBR
Lane Configurations						
Traffic Volume (veh/h)	1218	23	195	1805	241	168
Future Volume (veh/h)	1218	23	195	1805	241	168
Number	2	12	1	6	7	14
Initial Q (Qb), veh	0	0	0	0	0	0
Ped-Bike Adj(A_pbT)		1.00	1.00		1.00	1.00
Parking Bus, Adj	1.00	1.00	1.00	1.00	1.00	1.00
Adj Sat Flow, veh/h/ln	1863	1900	1863	1863	1863	1863
Adj Flow Rate, veh/h	1282	24	205	1900	259	181
Adj No. of Lanes	2	0	1	2	1	1
Peak Hour Factor	0.95	0.95	0.95	0.95	0.93	0.93
Percent Heavy Veh, %	2	2	2	2	2	2
Cap, veh/h	2311	43	337	2645	290	259
Arrive On Green	0.65	0.65	0.05	0.75	0.16	0.16
Sat Flow, veh/h	3647	67	1774	3632	1774	1583
Grp Volume(v), veh/h	638	668	205	1900	259	181
Grp Sat Flow(s),veh/h/ln	1770	1851	1774	1770	1774	1583
Q Serve(g_s), s	27.6	27.6	5.1	41.0	20.0	15.1
Cycle Q Clear(g_c), s	27.6	27.6	5.1	41.0	20.0	15.1
Prop In Lane		0.04	1.00		1.00	1.00
Lane Grp Cap(c), veh/h	1151	1204	337	2645	290	259
V/C Ratio(X)	0.55	0.55	0.61	0.72	0.89	0.70
Avail Cap(c_a), veh/h	1151	1204	482	2645	367	328
HCM Platoon Ratio	1.00	1.00	1.00	1.00	1.00	1.00
Upstream Filter(I)	1.00	1.00	1.00	1.00	1.00	1.00
Uniform Delay (d), s/veh	13.4	13.4	12.4	9.7	57.4	55.3
Incr Delay (d2), s/veh	1.9	1.8	1.8	1.7	19.7	4.6
Initial Q Delay(d3),s/veh	0.0	0.0	0.0	0.0	0.0	0.0
%ile BackOfQ(50%),veh/ln	14.1	14.7	3.4	20.4	11.4	7.0
LnGrp Delay(d),s/veh	15.3	15.2	14.2	11.4	77.1	60.0
LnGrp LOS	B	B	B	B	E	E
Approach Vol, veh/h	1306			2105	440	
Approach Delay, s/veh	15.3			11.6	70.0	
Approach LOS	B			B	E	

Timer	1	2	3	4	5	6	7	8
Assigned Phs	1	2		4		6		
Phs Duration (G+Y+Rc), s	13.6	97.5		28.9		111.1		
Change Period (Y+Rc), s	6.0	6.5		6.0		6.5		
Max Green Setting (Gmax), s	19.0	73.5		29.0		98.5		
Max Q Clear Time (g_c+I1), s	7.1	29.6		22.0		43.0		
Green Ext Time (p_c), s	0.4	37.6		0.9		45.8		

Intersection Summary	
HCM 2010 Ctrl Delay	19.5
HCM 2010 LOS	B

Intersection	
Int Delay, s/veh	7

Movement	WBL	WBR	NBT	NBR	SBL	SBT
Lane Configurations						
Traffic Vol, veh/h	0	50	1	3	15	7
Future Vol, veh/h	0	50	1	3	15	7
Conflicting Peds, #/hr	0	0	0	0	0	0
Sign Control	Stop	Stop	Free	Free	Free	Free
RT Channelized	-	None	-	None	-	None
Storage Length	0	-	-	-	-	-
Veh in Median Storage, #	0	-	0	-	-	0
Grade, %	0	-	0	-	-	0
Peak Hour Factor	75	75	50	50	82	82
Heavy Vehicles, %	2	2	2	2	3	3
Mvmt Flow	0	67	2	6	18	9

Major/Minor	Minor1		Major1		Major2	
Conflicting Flow All	50	5	0	0	8	0
Stage 1	5	-	-	-	-	-
Stage 2	45	-	-	-	-	-
Critical Hdwy	6.42	6.22	-	-	4.13	-
Critical Hdwy Stg 1	5.42	-	-	-	-	-
Critical Hdwy Stg 2	5.42	-	-	-	-	-
Follow-up Hdwy	3.518	3.318	-	-	2.227	-
Pot Cap-1 Maneuver	959	1078	-	-	1606	-
Stage 1	1018	-	-	-	-	-
Stage 2	977	-	-	-	-	-
Platoon blocked, %			-	-		-
Mov Cap-1 Maneuver	948	1078	-	-	1606	-
Mov Cap-2 Maneuver	948	-	-	-	-	-
Stage 1	1018	-	-	-	-	-
Stage 2	966	-	-	-	-	-

Approach	WB	NB	SB
HCM Control Delay, s	8.6	0	5
HCM LOS	A		

Minor Lane/Major Mvmt	NBT	NBR	WBLn1	SBL	SBT
Capacity (veh/h)	-	-	1078	1606	-
HCM Lane V/C Ratio	-	-	0.062	0.011	-
HCM Control Delay (s)	-	-	8.6	7.3	0
HCM Lane LOS	-	-	A	A	A
HCM 95th %tile Q(veh)	-	-	0.2	0	-

Intersection	
Int Delay, s/veh	4.6

Movement	EBL	EBR	NBL	NBT	SBT	SBR
Lane Configurations						
Traffic Vol, veh/h	28	16	14	11	10	33
Future Vol, veh/h	28	16	14	11	10	33
Conflicting Peds, #/hr	0	0	3	0	0	3
Sign Control	Stop	Stop	Free	Free	Free	Free
RT Channelized	-	None	-	None	-	None
Storage Length	0	-	-	-	-	-
Veh in Median Storage, #	0	-	-	0	0	-
Grade, %	0	-	-	0	0	-
Peak Hour Factor	75	75	67	67	80	80
Heavy Vehicles, %	2	2	2	2	2	2
Mvmt Flow	37	21	21	16	13	41

Major/Minor	Minor2		Major1		Major2	
Conflicting Flow All	94	36	57	0	-	0
Stage 1	36	-	-	-	-	-
Stage 2	58	-	-	-	-	-
Critical Hdwy	6.42	6.22	4.12	-	-	-
Critical Hdwy Stg 1	5.42	-	-	-	-	-
Critical Hdwy Stg 2	5.42	-	-	-	-	-
Follow-up Hdwy	3.518	3.318	2.218	-	-	-
Pot Cap-1 Maneuver	906	1037	1547	-	-	-
Stage 1	986	-	-	-	-	-
Stage 2	965	-	-	-	-	-
Platoon blocked, %				-	-	-
Mov Cap-1 Maneuver	888	1034	1547	-	-	-
Mov Cap-2 Maneuver	888	-	-	-	-	-
Stage 1	983	-	-	-	-	-
Stage 2	949	-	-	-	-	-

Approach	EB	NB	SB
HCM Control Delay, s	9.1	4.1	0
HCM LOS	A		

Minor Lane/Major Mvmt	NBL	NBT	EBLn1	SBT	SBR
Capacity (veh/h)	1547	-	936	-	-
HCM Lane V/C Ratio	0.014	-	0.063	-	-
HCM Control Delay (s)	7.4	0	9.1	-	-
HCM Lane LOS	A	A	A	-	-
HCM 95th %tile Q(veh)	0	-	0.2	-	-

Intersection	
Int Delay, s/veh	5.5

Movement	EBL	EBT	EBR	WBL	WBT	WBR	NBL	NBT	NBR	SBL	SBT	SBR
Lane Configurations												
Traffic Vol, veh/h	28	10	1	5	12	4	0	6	3	9	27	79
Future Vol, veh/h	28	10	1	5	12	4	0	6	3	9	27	79
Conflicting Peds, #/hr	8	0	4	4	0	8	0	0	3	3	0	0
Sign Control	Stop	Stop	Stop	Stop	Stop	Stop	Free	Free	Free	Free	Free	Free
RT Channelized	-	-	None	-	-	None	-	-	None	-	-	None
Storage Length	-	-	-	-	-	-	-	-	-	-	-	-
Veh in Median Storage, #	-	0	-	-	0	-	-	0	-	-	0	-
Grade, %	-	0	-	-	0	-	-	0	-	-	0	-
Peak Hour Factor	25	75	75	66	66	66	38	38	38	93	93	93
Heavy Vehicles, %	2	2	2	2	2	2	5	5	5	2	2	2
Mvmt Flow	112	13	1	8	18	6	0	16	8	10	29	85

Major/Minor	Minor2			Minor1			Major1			Major2		
Conflicting Flow All	131	118	76	125	156	31	114	0	0	27	0	0
Stage 1	91	91	-	23	23	-	-	-	-	-	-	-
Stage 2	40	27	-	102	133	-	-	-	-	-	-	-
Critical Hdwy	7.12	6.52	6.22	7.12	6.52	6.22	4.15	-	-	4.12	-	-
Critical Hdwy Stg 1	6.12	5.52	-	6.12	5.52	-	-	-	-	-	-	-
Critical Hdwy Stg 2	6.12	5.52	-	6.12	5.52	-	-	-	-	-	-	-
Follow-up Hdwy	3.518	4.018	3.318	3.518	4.018	3.318	2.245	-	-	2.218	-	-
Pot Cap-1 Maneuver	841	772	985	849	736	1043	1457	-	-	1587	-	-
Stage 1	916	820	-	995	876	-	-	-	-	-	-	-
Stage 2	975	873	-	904	786	-	-	-	-	-	-	-
Platoon blocked, %								-	-		-	-
Mov Cap-1 Maneuver	810	764	981	827	729	1032	1451	-	-	1575	-	-
Mov Cap-2 Maneuver	810	764	-	827	729	-	-	-	-	-	-	-
Stage 1	916	814	-	992	873	-	-	-	-	-	-	-
Stage 2	942	871	-	878	780	-	-	-	-	-	-	-

Approach	EB	WB	NB	SB
HCM Control Delay, s	10.3	9.7	0	0.6
HCM LOS	B	A		

Minor Lane/Major Mvmt	NBL	NBT	NBR	EBLn1	WBLn1	SBL	SBT	SBR
Capacity (veh/h)	1451	-	-	806	796	1575	-	-
HCM Lane V/C Ratio	-	-	-	0.157	0.04	0.006	-	-
HCM Control Delay (s)	0	-	-	10.3	9.7	7.3	0	-
HCM Lane LOS	A	-	-	B	A	A	A	-
HCM 95th %tile Q(veh)	0	-	-	0.6	0.1	0	-	-

Intersection	
Intersection Delay, s/veh	8.3
Intersection LOS	A

Movement	EBU	EBL	EBR	NBU	NBL	NBT	SBU	SBT	SBR
Lane Configurations									
Traffic Vol, veh/h	0	9	35	0	79	46	0	59	8
Future Vol, veh/h	0	9	35	0	79	46	0	59	8
Peak Hour Factor	0.92	0.72	0.72	0.92	0.58	0.58	0.92	0.65	0.65
Heavy Vehicles, %	2	2	2	2	2	2	2	2	2
Mvmt Flow	0	13	49	0	136	79	0	91	12
Number of Lanes	0	1	0	0	0	1	0	1	0

Approach	EB	NB	SB
Opposing Approach		SB	NB
Opposing Lanes	0	1	1
Conflicting Approach Left	SB	EB	
Conflicting Lanes Left	1	1	0
Conflicting Approach Right	NB		EB
Conflicting Lanes Right	1	0	1
HCM Control Delay	7.5	8.8	7.8
HCM LOS	A	A	A

Lane	NBLn1	EBLn1	SBLn1
Vol Left, %	63%	20%	0%
Vol Thru, %	37%	0%	88%
Vol Right, %	0%	80%	12%
Sign Control	Stop	Stop	Stop
Traffic Vol by Lane	125	44	67
LT Vol	79	9	0
Through Vol	46	0	59
RT Vol	0	35	8
Lane Flow Rate	216	61	103
Geometry Grp	1	1	1
Degree of Util (X)	0.254	0.071	0.118
Departure Headway (Hd)	4.246	4.201	4.133
Convergence, Y/N	Yes	Yes	Yes
Cap	841	858	855
Service Time	2.303	2.201	2.221
HCM Lane V/C Ratio	0.257	0.071	0.12
HCM Control Delay	8.8	7.5	7.8
HCM Lane LOS	A	A	A
HCM 95th-tile Q	1	0.2	0.4

Movement	EBT	EBR	WBL	WBT	NBL	NBR
Lane Configurations						
Traffic Volume (veh/h)	1690	39	81	1301	123	65
Future Volume (veh/h)	1690	39	81	1301	123	65
Number	2	12	1	6	7	14
Initial Q (Qb), veh	0	0	0	0	0	0
Ped-Bike Adj(A_pbT)		1.00	1.00		1.00	1.00
Parking Bus, Adj	1.00	1.00	1.00	1.00	1.00	1.00
Adj Sat Flow, veh/h/ln	1845	1900	1863	1863	1863	1863
Adj Flow Rate, veh/h	1878	43	85	1369	152	80
Adj No. of Lanes	2	0	1	2	1	1
Peak Hour Factor	0.90	0.90	0.95	0.95	0.81	0.81
Percent Heavy Veh, %	3	3	2	2	2	2
Cap, veh/h	2560	58	209	2860	182	162
Arrive On Green	0.73	0.73	0.03	0.81	0.10	0.10
Sat Flow, veh/h	3595	80	1774	3632	1774	1583
Grp Volume(v), veh/h	936	985	85	1369	152	80
Grp Sat Flow(s),veh/h/ln	1752	1830	1774	1770	1774	1583
Q Serve(g_s), s	43.2	43.9	1.6	16.9	11.8	6.7
Cycle Q Clear(g_c), s	43.2	43.9	1.6	16.9	11.8	6.7
Prop In Lane		0.04	1.00		1.00	1.00
Lane Grp Cap(c), veh/h	1281	1338	209	2860	182	162
V/C Ratio(X)	0.73	0.74	0.41	0.48	0.84	0.49
Avail Cap(c_a), veh/h	1281	1338	389	2860	367	328
HCM Platoon Ratio	1.00	1.00	1.00	1.00	1.00	1.00
Upstream Filter(I)	1.00	1.00	1.00	1.00	1.00	1.00
Uniform Delay (d), s/veh	10.9	11.0	15.4	4.2	61.7	59.4
Incr Delay (d2), s/veh	3.7	3.6	1.3	0.6	9.6	2.3
Initial Q Delay(d3),s/veh	0.0	0.0	0.0	0.0	0.0	0.0
%ile BackOfQ(50%),veh/ln	21.9	23.2	1.7	8.4	6.3	3.0
LnGrp Delay(d),s/veh	14.6	14.6	16.7	4.8	71.3	61.7
LnGrp LOS	B	B	B	A	E	E
Approach Vol, veh/h	1921			1454	232	
Approach Delay, s/veh	14.6			5.5	68.0	
Approach LOS	B			A	E	

Timer	1	2	3	4	5	6	7	8
Assigned Phs	1	2		4		6		
Phs Duration (G+Y+Rc), s	10.8	108.8		20.4		119.6		
Change Period (Y+Rc), s	6.0	6.5		6.0		6.5		
Max Green Setting (Gmax), s	19.0	73.5		29.0		98.5		
Max Q Clear Time (g_c+I1), s	3.6	45.9		13.8		18.9		
Green Ext Time (p_c), s	0.1	25.3		0.6		63.4		

Intersection Summary	
HCM 2010 Ctrl Delay	14.4
HCM 2010 LOS	B

Intersection	
Int Delay, s/veh	3.4

Movement	WBL	WBR	NBT	NBR	SBL	SBT
Lane Configurations						
Traffic Vol, veh/h	1	34	22	8	22	14
Future Vol, veh/h	1	34	22	8	22	14
Conflicting Peds, #/hr	0	0	0	0	0	0
Sign Control	Stop	Stop	Free	Free	Free	Free
RT Channelized	-	None	-	None	-	None
Storage Length	0	-	-	-	-	-
Veh in Median Storage, #	0	-	0	-	-	0
Grade, %	0	-	0	-	-	0
Peak Hour Factor	75	75	33	33	72	72
Heavy Vehicles, %	2	2	2	2	3	3
Mvmt Flow	1	45	67	24	31	19

Major/Minor	Minor1		Major1		Major2	
Conflicting Flow All	160	79	0	0	91	0
Stage 1	79	-	-	-	-	-
Stage 2	81	-	-	-	-	-
Critical Hdwy	6.42	6.22	-	-	4.13	-
Critical Hdwy Stg 1	5.42	-	-	-	-	-
Critical Hdwy Stg 2	5.42	-	-	-	-	-
Follow-up Hdwy	3.518	3.318	-	-	2.227	-
Pot Cap-1 Maneuver	831	981	-	-	1498	-
Stage 1	944	-	-	-	-	-
Stage 2	942	-	-	-	-	-
Platoon blocked, %			-	-		-
Mov Cap-1 Maneuver	814	981	-	-	1498	-
Mov Cap-2 Maneuver	814	-	-	-	-	-
Stage 1	944	-	-	-	-	-
Stage 2	922	-	-	-	-	-

Approach	WB	NB	SB
HCM Control Delay, s	8.9	0	4.6
HCM LOS	A		

Minor Lane/Major Mvmt	NBT	NBR	WBLn1	SBL	SBT
Capacity (veh/h)	-	-	975	1498	-
HCM Lane V/C Ratio	-	-	0.048	0.02	-
HCM Control Delay (s)	-	-	8.9	7.5	0
HCM Lane LOS	-	-	A	A	A
HCM 95th %tile Q(veh)	-	-	0.2	0.1	-

Intersection	
Int Delay, s/veh	4.6

Movement	EBL	EBR	NBL	NBT	SBT	SBR
Lane Configurations						
Traffic Vol, veh/h	9	22	24	18	4	15
Future Vol, veh/h	9	22	24	18	4	15
Conflicting Peds, #/hr	0	0	1	0	0	1
Sign Control	Stop	Stop	Free	Free	Free	Free
RT Channelized	-	None	-	None	-	None
Storage Length	0	-	-	-	-	-
Veh in Median Storage, #	0	-	-	0	0	-
Grade, %	0	-	-	0	0	-
Peak Hour Factor	72	72	67	67	56	56
Heavy Vehicles, %	2	2	2	2	2	2
Mvmt Flow	13	31	36	27	7	27

Major/Minor	Minor2		Major1		Major2	
Conflicting Flow All	121	22	35	0	-	0
Stage 1	22	-	-	-	-	-
Stage 2	99	-	-	-	-	-
Critical Hdwy	6.42	6.22	4.12	-	-	-
Critical Hdwy Stg 1	5.42	-	-	-	-	-
Critical Hdwy Stg 2	5.42	-	-	-	-	-
Follow-up Hdwy	3.518	3.318	2.218	-	-	-
Pot Cap-1 Maneuver	874	1055	1576	-	-	-
Stage 1	1001	-	-	-	-	-
Stage 2	925	-	-	-	-	-
Platoon blocked, %				-	-	-
Mov Cap-1 Maneuver	852	1054	1576	-	-	-
Mov Cap-2 Maneuver	852	-	-	-	-	-
Stage 1	1000	-	-	-	-	-
Stage 2	903	-	-	-	-	-

Approach	EB	NB	SB
HCM Control Delay, s	8.8	4.2	0
HCM LOS	A		

Minor Lane/Major Mvmt	NBL	NBT	EBLn1	SBT	SBR
Capacity (veh/h)	1576	-	986	-	-
HCM Lane V/C Ratio	0.023	-	0.044	-	-
HCM Control Delay (s)	7.3	0	8.8	-	-
HCM Lane LOS	A	A	A	-	-
HCM 95th %tile Q(veh)	0.1	-	0.1	-	-

Intersection	
Int Delay, s/veh	3.7

Movement	EBL	EBT	EBR	WBL	WBT	WBR	NBL	NBT	NBR	SBL	SBT	SBR
Lane Configurations												
Traffic Vol, veh/h	41	5	0	3	9	0	1	31	2	2	18	48
Future Vol, veh/h	41	5	0	3	9	0	1	31	2	2	18	48
Conflicting Peds, #/hr	0	0	1	1	0	0	1	0	0	0	0	1
Sign Control	Stop	Stop	Stop	Stop	Stop	Stop	Free	Free	Free	Free	Free	Free
RT Channelized	-	-	None	-	-	None	-	-	None	-	-	None
Storage Length	-	-	-	-	-	-	-	-	-	-	-	-
Veh in Median Storage, #	-	0	-	-	0	-	-	0	-	-	0	-
Grade, %	-	0	-	-	0	-	-	0	-	-	0	-
Peak Hour Factor	75	75	75	75	75	75	83	83	83	74	74	74
Heavy Vehicles, %	2	2	2	2	2	2	5	5	5	2	2	2
Mvmt Flow	55	7	0	4	12	0	1	37	2	3	24	65

Major/Minor	Minor2			Minor1			Major1			Major2		
Conflicting Flow All	110	105	59	107	137	39	90	0	0	40	0	0
Stage 1	63	63	-	41	41	-	-	-	-	-	-	-
Stage 2	47	42	-	66	96	-	-	-	-	-	-	-
Critical Hdwy	7.12	6.52	6.22	7.12	6.52	6.22	4.15	-	-	4.12	-	-
Critical Hdwy Stg 1	6.12	5.52	-	6.12	5.52	-	-	-	-	-	-	-
Critical Hdwy Stg 2	6.12	5.52	-	6.12	5.52	-	-	-	-	-	-	-
Follow-up Hdwy	3.518	4.018	3.318	3.518	4.018	3.318	2.245	-	-	2.218	-	-
Pot Cap-1 Maneuver	868	785	1007	872	754	1033	1486	-	-	1570	-	-
Stage 1	948	842	-	974	861	-	-	-	-	-	-	-
Stage 2	967	860	-	945	815	-	-	-	-	-	-	-
Platoon blocked, %								-	-		-	-
Mov Cap-1 Maneuver	855	782	1005	864	751	1033	1485	-	-	1570	-	-
Mov Cap-2 Maneuver	855	782	-	864	751	-	-	-	-	-	-	-
Stage 1	946	840	-	973	860	-	-	-	-	-	-	-
Stage 2	953	859	-	935	813	-	-	-	-	-	-	-

Approach	EB	WB	NB	SB
HCM Control Delay, s	9.6	9.7	0.2	0.2
HCM LOS	A	A		

Minor Lane/Major Mvmt	NBL	NBT	NBR	EBLn1	WBLn1	SBL	SBT	SBR
Capacity (veh/h)	1485	-	-	846	776	1570	-	-
HCM Lane V/C Ratio	0.001	-	-	0.072	0.021	0.002	-	-
HCM Control Delay (s)	7.4	0	-	9.6	9.7	7.3	0	-
HCM Lane LOS	A	A	-	A	A	A	A	-
HCM 95th %tile Q(veh)	0	-	-	0.2	0.1	0	-	-

Intersection	
Intersection Delay, s/veh	9.2
Intersection LOS	A

Movement	EBU	EBL	EBR	NBU	NBL	NBT	SBU	SBT	SBR
Lane Configurations									
Traffic Vol, veh/h	0	36	209	0	77	36	0	47	5
Future Vol, veh/h	0	36	209	0	77	36	0	47	5
Peak Hour Factor	0.92	0.77	0.77	0.92	0.70	0.70	0.92	0.51	0.51
Heavy Vehicles, %	2	2	2	2	2	2	2	2	2
Mvmt Flow	0	47	271	0	110	51	0	92	10
Number of Lanes	0	1	0	0	0	1	0	1	0

Approach	EB	NB	SB
Opposing Approach		SB	NB
Opposing Lanes	0	1	1
Conflicting Approach Left	SB	EB	
Conflicting Lanes Left	1	1	0
Conflicting Approach Right	NB		EB
Conflicting Lanes Right	1	0	1
HCM Control Delay	9.4	9.3	8.6
HCM LOS	A	A	A

Lane	NBLn1	EBLn1	SBLn1
Vol Left, %	68%	15%	0%
Vol Thru, %	32%	0%	90%
Vol Right, %	0%	85%	10%
Sign Control	Stop	Stop	Stop
Traffic Vol by Lane	113	245	52
LT Vol	77	36	0
Through Vol	36	0	47
RT Vol	0	209	5
Lane Flow Rate	161	318	102
Geometry Grp	1	1	1
Degree of Util (X)	0.219	0.362	0.135
Departure Headway (Hd)	4.878	4.095	4.763
Convergence, Y/N	Yes	Yes	Yes
Cap	735	878	750
Service Time	2.919	2.12	2.806
HCM Lane V/C Ratio	0.219	0.362	0.136
HCM Control Delay	9.3	9.4	8.6
HCM Lane LOS	A	A	A
HCM 95th-tile Q	0.8	1.7	0.5

Movement	EBT	EBR	WBL	WBT	NBL	NBR
Lane Configurations						
Traffic Volume (veh/h)	1218	36	205	1805	252	174
Future Volume (veh/h)	1218	36	205	1805	252	174
Number	2	12	1	6	7	14
Initial Q (Qb), veh	0	0	0	0	0	0
Ped-Bike Adj(A_pbT)		1.00	1.00		1.00	1.00
Parking Bus, Adj	1.00	1.00	1.00	1.00	1.00	1.00
Adj Sat Flow, veh/h/ln	1863	1900	1863	1863	1863	1863
Adj Flow Rate, veh/h	1282	38	216	1900	271	187
Adj No. of Lanes	2	0	1	2	1	1
Peak Hour Factor	0.95	0.95	0.95	0.95	0.93	0.93
Percent Heavy Veh, %	2	2	2	2	2	2
Cap, veh/h	2248	67	333	2622	301	269
Arrive On Green	0.64	0.64	0.06	0.74	0.17	0.17
Sat Flow, veh/h	3603	104	1774	3632	1774	1583
Grp Volume(v), veh/h	646	674	216	1900	271	187
Grp Sat Flow(s),veh/h/ln	1770	1844	1774	1770	1774	1583
Q Serve(g_s), s	28.9	29.0	5.6	42.1	21.0	15.6
Cycle Q Clear(g_c), s	28.9	29.0	5.6	42.1	21.0	15.6
Prop In Lane		0.06	1.00		1.00	1.00
Lane Grp Cap(c), veh/h	1134	1181	333	2622	301	269
V/C Ratio(X)	0.57	0.57	0.65	0.72	0.90	0.70
Avail Cap(c_a), veh/h	1134	1181	472	2622	367	328
HCM Platoon Ratio	1.00	1.00	1.00	1.00	1.00	1.00
Upstream Filter(I)	1.00	1.00	1.00	1.00	1.00	1.00
Uniform Delay (d), s/veh	14.2	14.2	13.8	10.2	56.9	54.7
Incr Delay (d2), s/veh	2.1	2.0	2.1	1.8	21.3	4.8
Initial Q Delay(d3),s/veh	0.0	0.0	0.0	0.0	0.0	0.0
%ile BackOfQ(50%),veh/ln	14.7	15.3	4.0	21.0	12.1	7.2
LnGrp Delay(d),s/veh	16.3	16.3	15.9	11.9	78.2	59.5
LnGrp LOS	B	B	B	B	E	E
Approach Vol, veh/h	1320			2116	458	
Approach Delay, s/veh	16.3			12.3	70.6	
Approach LOS	B			B	E	

Timer	1	2	3	4	5	6	7	8
Assigned Phs	1	2		4		6		
Phs Duration (G+Y+Rc), s	14.0	96.2		29.8		110.2		
Change Period (Y+Rc), s	6.0	6.5		6.0		6.5		
Max Green Setting (Gmax), s	19.0	73.5		29.0		98.5		
Max Q Clear Time (g_c+I1), s	7.6	31.0		23.0		44.1		
Green Ext Time (p_c), s	0.4	36.7		0.8		45.3		

Intersection Summary	
HCM 2010 Ctrl Delay	20.5
HCM 2010 LOS	C

Intersection	
Int Delay, s/veh	4.2

Movement	WBL	WBR	NBT	NBR	SBL	SBT
Lane Configurations						
Traffic Vol, veh/h	3	50	18	9	15	30
Future Vol, veh/h	3	50	18	9	15	30
Conflicting Peds, #/hr	0	0	0	0	0	0
Sign Control	Stop	Stop	Free	Free	Free	Free
RT Channelized	-	None	-	None	-	None
Storage Length	0	-	-	-	-	-
Veh in Median Storage, #	0	-	0	-	-	0
Grade, %	0	-	0	-	-	0
Peak Hour Factor	75	75	50	50	82	82
Heavy Vehicles, %	2	2	2	2	3	3
Mvmt Flow	4	67	36	18	18	37

Major/Minor	Minor1		Major1		Major2	
Conflicting Flow All	118	45	0	0	54	0
Stage 1	45	-	-	-	-	-
Stage 2	73	-	-	-	-	-
Critical Hdwy	6.42	6.22	-	-	4.13	-
Critical Hdwy Stg 1	5.42	-	-	-	-	-
Critical Hdwy Stg 2	5.42	-	-	-	-	-
Follow-up Hdwy	3.518	3.318	-	-	2.227	-
Pot Cap-1 Maneuver	878	1025	-	-	1545	-
Stage 1	977	-	-	-	-	-
Stage 2	950	-	-	-	-	-
Platoon blocked, %			-	-		-
Mov Cap-1 Maneuver	867	1025	-	-	1545	-
Mov Cap-2 Maneuver	867	-	-	-	-	-
Stage 1	977	-	-	-	-	-
Stage 2	939	-	-	-	-	-

Approach	WB	NB	SB
HCM Control Delay, s	8.8	0	2.5
HCM LOS	A		

Minor Lane/Major Mvmt	NBT	NBR	WBLn1	SBL	SBT
Capacity (veh/h)	-	-	1015	1545	-
HCM Lane V/C Ratio	-	-	0.07	0.012	-
HCM Control Delay (s)	-	-	8.8	7.4	0
HCM Lane LOS	-	-	A	A	A
HCM 95th %tile Q(veh)	-	-	0.2	0	-

Intersection	
Int Delay, s/veh	4.7

Movement	EBL	EBR	NBL	NBT	SBT	SBR
Lane Configurations						
Traffic Vol, veh/h	34	16	14	11	10	36
Future Vol, veh/h	34	16	14	11	10	36
Conflicting Peds, #/hr	0	0	3	0	0	3
Sign Control	Stop	Stop	Free	Free	Free	Free
RT Channelized	-	None	-	None	-	None
Storage Length	0	-	-	-	-	-
Veh in Median Storage, #	0	-	-	0	0	-
Grade, %	0	-	-	0	0	-
Peak Hour Factor	75	75	67	67	80	80
Heavy Vehicles, %	2	2	2	2	2	2
Mvmt Flow	45	21	21	16	13	45

Major/Minor	Minor2		Major1		Major2	
Conflicting Flow All	96	38	61	0	-	0
Stage 1	38	-	-	-	-	-
Stage 2	58	-	-	-	-	-
Critical Hdwy	6.42	6.22	4.12	-	-	-
Critical Hdwy Stg 1	5.42	-	-	-	-	-
Critical Hdwy Stg 2	5.42	-	-	-	-	-
Follow-up Hdwy	3.518	3.318	2.218	-	-	-
Pot Cap-1 Maneuver	903	1034	1542	-	-	-
Stage 1	984	-	-	-	-	-
Stage 2	965	-	-	-	-	-
Platoon blocked, %				-	-	-
Mov Cap-1 Maneuver	885	1031	1542	-	-	-
Mov Cap-2 Maneuver	885	-	-	-	-	-
Stage 1	981	-	-	-	-	-
Stage 2	949	-	-	-	-	-

Approach	EB	NB	SB
HCM Control Delay, s	9.2	4.1	0
HCM LOS	A		

Minor Lane/Major Mvmt	NBL	NBT	EBLn1	SBT	SBR
Capacity (veh/h)	1542	-	927	-	-
HCM Lane V/C Ratio	0.014	-	0.072	-	-
HCM Control Delay (s)	7.4	0	9.2	-	-
HCM Lane LOS	A	A	A	-	-
HCM 95th %tile Q(veh)	0	-	0.2	-	-

Intersection	
Int Delay, s/veh	5.9

Movement	EBL	EBT	EBR	WBL	WBT	WBR	NBL	NBT	NBR	SBL	SBT	SBR
Lane Configurations												
Traffic Vol, veh/h	34	10	1	5	12	4	0	6	3	9	27	82
Future Vol, veh/h	34	10	1	5	12	4	0	6	3	9	27	82
Conflicting Peds, #/hr	8	0	4	4	0	8	0	0	3	3	0	0
Sign Control	Stop	Stop	Stop	Stop	Stop	Stop	Free	Free	Free	Free	Free	Free
RT Channelized	-	-	None	-	-	None	-	-	None	-	-	None
Storage Length	-	-	-	-	-	-	-	-	-	-	-	-
Veh in Median Storage, #	-	0	-	-	0	-	-	0	-	-	0	-
Grade, %	-	0	-	-	0	-	-	0	-	-	0	-
Peak Hour Factor	25	75	75	66	66	66	38	38	38	93	93	93
Heavy Vehicles, %	2	2	2	2	2	2	5	5	5	2	2	2
Mvmt Flow	136	13	1	8	18	6	0	16	8	10	29	88

Major/Minor	Minor2			Minor1			Major1			Major2		
Conflicting Flow All	132	119	77	127	160	31	117	0	0	27	0	0
Stage 1	92	92	-	23	23	-	-	-	-	-	-	-
Stage 2	40	27	-	104	137	-	-	-	-	-	-	-
Critical Hdwy	7.12	6.52	6.22	7.12	6.52	6.22	4.15	-	-	4.12	-	-
Critical Hdwy Stg 1	6.12	5.52	-	6.12	5.52	-	-	-	-	-	-	-
Critical Hdwy Stg 2	6.12	5.52	-	6.12	5.52	-	-	-	-	-	-	-
Follow-up Hdwy	3.518	4.018	3.318	3.518	4.018	3.318	2.245	-	-	2.218	-	-
Pot Cap-1 Maneuver	840	771	984	846	732	1043	1453	-	-	1587	-	-
Stage 1	915	819	-	995	876	-	-	-	-	-	-	-
Stage 2	975	873	-	902	783	-	-	-	-	-	-	-
Platoon blocked, %								-	-		-	-
Mov Cap-1 Maneuver	809	763	980	824	725	1032	1447	-	-	1575	-	-
Mov Cap-2 Maneuver	809	763	-	824	725	-	-	-	-	-	-	-
Stage 1	915	813	-	992	873	-	-	-	-	-	-	-
Stage 2	942	871	-	876	778	-	-	-	-	-	-	-

Approach	EB	WB	NB	SB
HCM Control Delay, s	10.5	9.7	0	0.6
HCM LOS	B	A		

Minor Lane/Major Mvmt	NBL	NBT	NBR	EBLn1	WBLn1	SBL	SBT	SBR
Capacity (veh/h)	1447	-	-	806	793	1575	-	-
HCM Lane V/C Ratio	-	-	-	0.187	0.04	0.006	-	-
HCM Control Delay (s)	0	-	-	10.5	9.7	7.3	0	-
HCM Lane LOS	A	-	-	B	A	A	A	-
HCM 95th %tile Q(veh)	0	-	-	0.7	0.1	0	-	-

Intersection	
Intersection Delay, s/veh	8.3
Intersection LOS	A

Movement	EBU	EBL	EBR	NBU	NBL	NBT	SBU	SBT	SBR
Lane Configurations									
Traffic Vol, veh/h	0	11	37	0	81	46	0	59	9
Future Vol, veh/h	0	11	37	0	81	46	0	59	9
Peak Hour Factor	0.92	0.72	0.72	0.92	0.58	0.58	0.92	0.65	0.65
Heavy Vehicles, %	2	2	2	2	2	2	2	2	2
Mvmt Flow	0	15	51	0	140	79	0	91	14
Number of Lanes	0	1	0	0	0	1	0	1	0

Approach	EB	NB	SB
Opposing Approach		SB	NB
Opposing Lanes	0	1	1
Conflicting Approach Left	SB	EB	
Conflicting Lanes Left	1	1	0
Conflicting Approach Right	NB		EB
Conflicting Lanes Right	1	0	1
HCM Control Delay	7.6	8.8	7.8
HCM LOS	A	A	A

Lane	NBLn1	EBLn1	SBLn1
Vol Left, %	64%	23%	0%
Vol Thru, %	36%	0%	87%
Vol Right, %	0%	77%	13%
Sign Control	Stop	Stop	Stop
Traffic Vol by Lane	127	48	68
LT Vol	81	11	0
Through Vol	46	0	59
RT Vol	0	37	9
Lane Flow Rate	219	67	105
Geometry Grp	1	1	1
Degree of Util (X)	0.259	0.078	0.12
Departure Headway (Hd)	4.258	4.234	4.138
Convergence, Y/N	Yes	Yes	Yes
Cap	836	851	853
Service Time	2.32	2.234	2.232
HCM Lane V/C Ratio	0.262	0.079	0.123
HCM Control Delay	8.8	7.6	7.8
HCM Lane LOS	A	A	A
HCM 95th-tile Q	1	0.3	0.4

KS.)

Ratification
Number: 2016-____

AN ORDINANCE

To make appropriations to meet the liabilities of the City of Charleston for the fiscal year ending December 31, 2017 (AS AMENDED).

Be it ordained by the Mayor and City Council members of Charleston in City Council assembled:

Section 1. That the following sums of money be, and are hereby appropriated for the purposes hereinafter mentioned, to-wit:

GENERAL GOVERNMENT

Div. #	Div. Name	
DEPARTMENT OF CLERK OF COUNCIL		
100000	City Council	
	Personnel	642,382
	Fringe Benefits	305,431
	Operating	115,812
	Capital	-
	Total	**1,063,625**
101000	Records Management	
	Personnel	83,481
	Fringe Benefits	32,759
	Operating	11,777
	Capital	-
	Total	**128,017**
EXECUTIVE DEPARTMENT		
110000	Municipal Court	
	Personnel	1,120,128
	Fringe Benefits	457,030
	Operating	336,274
	Capital	-
	Total	**1,913,432**
120000	Mayor's Office	
	Personnel	674,177
	Fringe Benefits	189,245
	Operating	70,400
	Capital	-
	Total	**933,822**

DEPARTMENT OF BUDGET, FINANCE AND REVENUE COLLECTIONS

130000	Budget and Finance Administration	
	Personnel	405,424
	Fringe Benefits	120,794
	Operating	23,350
	Capital	-
	Total	**549,568**
131000	Finance	
	Personnel	941,093
	Fringe Benefits	348,753
	Operating	170,590
	Capital	-
	Total	**1,460,436**
132000	Revenue Collections	
	Personnel	446,345
	Fringe Benefits	169,437
	Operating	371,425
	Capital	-
	Total	**987,207**
133000	Budget and Management	
	Personnel	412,105
	Fringe Benefits	138,532
	Operating	18,380
	Capital	-
	Total	**569,017**
134000	Procurement	
	Personnel	254,518
	Fringe Benefits	91,020
	Operating	115,250
	Capital	-
	Total	**460,788**
135000	Real Estate Management	
	Personnel	227,843
	Fringe Benefits	77,639
	Operating	61,350
	Capital	-
	Total	**366,832**
136000	Process/Service Improvement	
	Personnel	182,776
	Fringe Benefits	59,955
	Operating	332,800
	Capital	-
	Total	**575,531**

137000	Permit Center	
	Personnel	166,731
	Fringe Benefits	65,474
	Operating	22,050
	Capital	-
	Total	**254,255**
EXECUTIVE DEPARTMENT		
140000	Internal Auditing	
	Personnel	120,426
	Fringe Benefits	40,115
	Operating	16,880
	Capital	-
	Total	**177,421**
141000	Corporation Counsel	
	Personnel	722,935
	Fringe Benefits	216,550
	Operating	633,440
	Capital	-
	Total	**1,572,925**
142000	Prosecutor's Office	
	Personnel	246,828
	Fringe Benefits	87,847
	Operating	76,757
	Capital	-
	Total	**411,432**
DEPARTMENT OF HUMAN RESOURCES		
150000	Human Resources	
	Personnel	776,456
	Fringe Benefits	275,626
	Operating	179,275
	Capital	-
	Total	**1,231,357**
DEPARTMENT OF BUDGET, FINANCE AND REVENUE COLLECTIONS		
151000	Safety Management	
	Personnel	156,601
	Fringe Benefits	55,388
	Operating	103,950
	Capital	-
	Total	**315,939**
DEPARTMENT OF INFORMATION TECHNOLOGY		
161000	Information Technology	
	Personnel	1,135,968
	Fringe Benefits	395,133
	Operating	2,655,705
	Capital	489,265
	Total	**4,676,071**

162000	GIS	
	Personnel	323,035
	Fringe Benefits	112,735
	Operating	121,200
	Capital	-
	Total	**556,970**
163000	Telecommunications	
	Personnel	125,449
	Fringe Benefits	49,185
	Operating	743,387
	Capital	-
	Total	**918,021**
DEPARTMENT OF PARKS		
170000	Electrical	
	Personnel	449,500
	Fringe Benefits	170,188
	Operating	3,791,908
	Capital	-
	Total	**4,411,596**
170100	Facilities Maintenance	
	Personnel	472,151
	Fringe Benefits	182,768
	Operating	1,665,079
	Capital	-
	Total	**2,319,998**
DEPARTMENT OF BUDGET, FINANCE AND REVENUE COLLECTIONS		
171000	City Hall	
	Personnel	-
	Fringe Benefits	-
	Operating	216,197
	Capital	-
	Total	**216,197**
DEPARTMENT OF HUMAN RESOURCES		
171100	Mailroom	
	Personnel	24,626
	Fringe Benefits	12,973
	Operating	15,455
	Capital	-
	Total	**53,054**
DEPARTMENT OF BUDGET, FINANCE AND REVENUE COLLECTIONS		
171300	116 Meeting Street	
	Personnel	-
	Fringe Benefits	-
	Operating	56,650
	Capital	-
	Total	**56,650**

171310	Gaillard Complex	
	Personnel	-
	Fringe Benefits	-
	Operating	684,894
	Capital	11,100
	Total	**695,994**

DEPARTMENT OF BUDGET, FINANCE AND REVENUE COLLECTIONS

171500	Gallery at Waterfront Park	
	Personnel	-
	Fringe Benefits	-
	Operating	70,156
	Capital	-
	Total	**70,156**
171600	Lockwood Municipal Building	
	Personnel	-
	Fringe Benefits	-
	Operating	263,661
	Capital	-
	Total	**263,661**
171700	50 Broad Street	
	Personnel	-
	Fringe Benefits	-
	Operating	22,160
	Capital	-
	Total	**22,160**

NON-DEPARTMENTAL

180000	Pensions	
	Personnel	-
	Fringe Benefits	572,653
	Operating	-
	Capital	-
	Total	**572,653**
181000	Employee Benefits	
	Personnel	-
	Fringe Benefits	3,665,536
	Operating	11,000
	Capital	-
	Total	**3,676,536**
182000	General Insurance	
	Personnel	-
	Fringe Benefits	-
	Operating	2,380,027
	Capital	-
	Total	**2,380,027**

900000	Non-Departmental	
	Personnel	(1,811,424)
	Fringe Benefits	65,000
	Operating	2,181,444
	Capital	-
	Total	**435,020**
	Total General Government - General Fund	**34,296,368**

PUBLIC SAFETY

POLICE DEPARTMENT

200000	Police	
	Personnel	29,587,331
	Fringe Benefits	11,161,705
	Operating	5,697,432
	Capital	130,000
	Total	**46,576,468**
203000	Police Radio Shop	
	Personnel	227,734
	Fringe Benefits	85,689
	Operating	572,744
	Capital	-
	Total	**886,167**
206000	Community Outreach	
	Transfer Out	1,500
	Personnel	-
	Fringe Benefits	-
	Operating	85,960
	Capital	-
	Total	**87,460**
207000	Victims Assistance	
	Personnel	111,891
	Fringe Benefits	46,485
	Operating	33,425
	Capital	-
	Total	**191,801**

FIRE DEPARTMENT

210000	Fire	
	Personnel	19,234,705
	Fringe Benefits	7,109,237
	Operating	2,884,455
	Capital	199,060
	Total	**29,427,457**
211000	Fire Department Training	
	Personnel	488,060
	Fringe Benefits	166,355
	Operating	573,547
	Capital	30,000
	Total	**1,257,962**

213000	Fire Marshal's Office	
	Personnel	677,352
	Fringe Benefits	238,596
	Operating	73,995
	Capital	-
	Total	**989,943**
DEPARTMENT OF PUBLIC SERVICE		
220000	Engineering	
	Personnel	401,432
	Fringe Benefits	152,548
	Operating	51,050
	Capital	-
	Total	**605,030**
221000	Inspections	
	Personnel	1,056,422
	Fringe Benefits	395,839
	Operating	80,542
	Capital	-
	Total	**1,532,803**
DEPARTMENT OF LIVABILITY AND TOURISM		
225000	Livability	
	Personnel	608,180
	Fringe Benefits	250,197
	Operating	108,030
	Capital	-
	Total	**966,407**
DEPARTMENT OF TRAFFIC AND TRANSPORTATION		
230000	Traffic and Transportation	
	Personnel	1,014,851
	Fringe Benefits	395,719
	Operating	1,380,513
	Capital	38,952
	Total	**2,830,035**
DEPARTMENT OF INFORMATION TECHNOLOGY		
235000	Public Safety Information Technology	
	Personnel	-
	Fringe Benefits	-
	Operating	1,544,698
	Capital	88,400
	Total	**1,633,098**
	Total Public Safety - General Fund	**86,984,631**

PUBLIC SERVICE

DEPARTMENT OF PUBLIC SERVICE		
300000	Public Service Administration	
	Personnel	336,431
	Fringe Benefits	99,256
	Operating	31,950
	Capital	-
	Total	**467,637**
311000	Streets and Sidewalks Administration	
	Personnel	179,192
	Fringe Benefits	67,954
	Operating	507,200
	Capital	-
	Total	**754,346**

312000	Streets and Sidewalks	
	Personnel	957,709
	Fringe Benefits	448,909
	Operating	236,988
	Capital	-
	Total	**1,643,606**
321000	Environmental Services Administration	
	Personnel	312,065
	Fringe Benefits	118,616
	Operating	171,300
	Capital	-
	Total	**601,981**
322000	Garbage Collection	
	Personnel	1,480,982
	Fringe Benefits	633,783
	Operating	1,836,507
	Capital	-
	Total	**3,951,272**
323000	Trash Collection	
	Personnel	1,128,970
	Fringe Benefits	474,931
	Operating	158,150
	Capital	-
	Total	**1,762,051**
324000	Street Sweeping	
	Personnel	692,099
	Fringe Benefits	363,753
	Operating	37,086
	Capital	-
	Total	**1,092,938**
POLICE DEPARTMENT		
331000	Fleet Management	
	Personnel	762,545
	Fringe Benefits	321,231
	Operating	2,448,752
	Capital	36,300
	Total	**3,568,828**
	Total Public Service - General Fund	**13,842,659**

URBAN AND COMMUNITY DEVELOPMENT

DEPARTMENT OF HOUSING AND COMMUNITY DEVELOPMENT		
410000	Housing and Community Development	
	Personnel	547,279
	Fringe Benefits	187,892
	Operating	24,000
	Capital	-
	Total	**759,171**
DEPARTMENT OF PLANNING, PRESERVATION AND SUSTAINABILITY		
415000	Planning, Preservation and Sustainability Admin.	
	Personnel	282,435
	Fringe Benefits	96,577
	Operating	665,261
	Capital	-
	Total	**1,044,273**
420000	Preservation Division	
	Personnel	677,695
	Fringe Benefits	231,756
	Operating	44,200
	Capital	-
	Total	**953,651**
421000	Design Division	
	Personnel	109,844
	Fringe Benefits	36,490
	Operating	33,223
	Capital	-
	Total	**179,557**
430000	Planning and Sustainability	
	Personnel	300,636
	Fringe Benefits	100,200
	Operating	10,500
	Capital	-
	Total	**411,336**
	Total Urban and Community Development - General Fund	**3,347,988**

CULTURE AND RECREATION

EXECUTIVE DEPARTMENT		
500000	Cultural Affairs	
	Personnel	383,597
	Fringe Benefits	139,102
	Operating	117,808
	Capital	-
	Total	**640,507**
DEPARTMENT OF RECREATION		
510000	Recreation Administration	
	Personnel	207,791
	Fringe Benefits	73,647
	Operating	107,605
	Capital	-
	Total	**389,043**
511000	Recreation Athletics	
	Personnel	553,870
	Fringe Benefits	179,716
	Operating	-
	Capital	-
	Total	**733,586**

511200	Youth Sports	
	Personnel	-
	Fringe Benefits	-
	Operating	470,100
	Capital	-
	Total	**470,100**
511300	Adult Sports	
	Personnel	-
	Fringe Benefits	-
	Operating	53,510
	Capital	-
	Total	**53,510**
513000	Recreation Programs	
	Personnel	659,954
	Fringe Benefits	173,982
	Operating	207,495
	Capital	-
	Total	**1,041,431**
513100	Environmental Programs	
	Personnel	-
	Fringe Benefits	-
	Operating	7,155
	Capital	-
	Total	**7,155**
513300	Playground Programs	
	Personnel	-
	Fringe Benefits	-
	Operating	44,019
	Capital	-
	Total	**44,019**
513400	Community Programs	
	Personnel	-
	Fringe Benefits	-
	Operating	30,330
	Capital	-
	Total	**30,330**
515000	Recreation Facilities	
	Personnel	96,161
	Fringe Benefits	27,109
	Operating	2,185
	Capital	-
	Total	**125,455**

515010	James Island Recreation Center	
	Personnel	256,931
	Fringe Benefits	87,488
	Operating	182,625
	Capital	36,000
	Total	**563,044**
515020	St. Julian Devine	
	Personnel	137,059
	Fringe Benefits	40,235
	Operating	51,169
	Capital	-
	Total	**228,463**
515025	Bees Landing Recreation Center	
	Personnel	317,026
	Fringe Benefits	97,912
	Operating	231,540
	Capital	-
	Total	**646,478**
515030	Arthur Christopher Community Center	
	Personnel	228,651
	Fringe Benefits	74,783
	Operating	153,322
	Capital	-
	Total	**456,756**
515035	Shaw Community Center	
	Personnel	106,148
	Fringe Benefits	35,664
	Operating	19,860
	Capital	-
	Total	**161,672**
515040	West Ashley Park	
	Personnel	-
	Fringe Benefits	-
	Operating	43,425
	Capital	-
	Total	**43,425**
515045	Daniel Island Programs	
	Personnel	122,752
	Fringe Benefits	40,370
	Operating	65,290
	Capital	-
	Total	**228,412**
516000	Aquatics	
	Personnel	916,043
	Fringe Benefits	310,605
	Operating	274,130
	Capital	-
	Total	**1,500,778**

516010	WL Stephens Pool	
	Personnel	-
	Fringe Benefits	-
	Operating	1,000
	Capital	-
	Total	**1,000**
516020	MLK Pool	
	Personnel	-
	Fringe Benefits	-
	Operating	1,000
	Capital	-
	Total	**1,000**
516030	Herbert Hasell Pool	
	Personnel	-
	Fringe Benefits	-
	Operating	200
	Capital	-
	Total	**200**
516035	James Island Pool	
	Personnel	-
	Fringe Benefits	-
	Operating	750
	Capital	-
	Total	**750**
516040	Swim Team	
	Personnel	-
	Fringe Benefits	-
	Operating	29,760
	Capital	-
	Total	**29,760**
517000	Tennis	
	Personnel	496,347
	Fringe Benefits	146,718
	Operating	-
	Capital	-
	Total	**643,065**
517010	Charleston Tennis Center	
	Personnel	-
	Fringe Benefits	-
	Operating	153,508
	Capital	-
	Total	**153,508**
517020	Maybank Tennis Center	
	Personnel	-
	Fringe Benefits	-
	Operating	49,791
	Capital	-
	Total	**49,791**

517030	Inner City Youth Tennis	
	Personnel	-
	Fringe Benefits	-
	Operating	2,675
	Capital	-
	Total	**2,675**
518000	Gymnastics	
	Personnel	196,357
	Fringe Benefits	63,073
	Operating	-
	Capital	-
	Total	**259,430**
518010	Gymnastics Training Center	
	Personnel	-
	Fringe Benefits	-
	Operating	22,745
	Capital	-
	Total	**22,745**
DEPARTMENT OF BUDGET, FINANCE AND REVENUE COLLECTIONS		
518550	Maritime Center	
	Personnel	210,579
	Fringe Benefits	98,413
	Operating	264,525
	Capital	-
	Total	**573,517**
DEPARTMENT OF PARKS		
520000	Capital Projects	
	Personnel	530,093
	Fringe Benefits	162,018
	Operating	548,878
	Capital	-
	Total	**1,240,989**
521000	Parks Administration	
	Personnel	808,167
	Fringe Benefits	281,203
	Operating	187,665
	Capital	-
	Total	**1,277,035**
522000	Grounds Maintenance	
	Personnel	3,071,715
	Fringe Benefits	1,353,978
	Operating	1,636,949
	Capital	34,100
	Total	**6,096,742**
523000	Construction	
	Personnel	450,337
	Fringe Benefits	190,501
	Operating	242,614
	Capital	-
	Total	**883,452**
526000	Parks Maintenance Projects	
	Personnel	-
	Fringe Benefits	-
	Operating	76,980
	Capital	-
	Total	**76,980**

DEPARTMENT OF BUDGET, FINANCE AND REVENUE COLLECTIONS

531000	Dock Street Theatre	
	Personnel	313,090
	Fringe Benefits	110,613
	Operating	197,900
	Capital	-
	Total	**621,603**
	Total Culture and Recreation - General Fund	**19,298,406**

COMMUNITY PROMOTIONS

DEPARTMENT OF LIVABILITY AND TOURISM

600000	Tourism	
	Personnel	266,456
	Fringe Benefits	95,057
	Operating	196,390
	Capital	-
	Total	**557,903**

NON-DEPARTMENTAL

620000	Community Promotions	
	Personnel	-
	Fringe Benefits	-
	Operating	199,850
	Capital	-
	Total	**199,850**
	Total Community Promotions - General Fund	**757,753**

HEALTH AND WELFARE

EXECUTIVE DEPARTMENT

700000	Public Information	
	Personnel	187,680
	Fringe Benefits	61,572
	Operating	17,430
	Capital	-
	Total	**266,682**
701000	Mayor's Office for Children, Youth, and Families	
	Personnel	141,034
	Fringe Benefits	51,776
	Operating	21,750
	Capital	-
	Total	**214,560**

NON-DEPARTMENTAL

710000	Assistance Programs	
	Personnel	-
	Fringe Benefits	-
	Operating	436,500
	Capital	-
	Total	**436,500**
	Total Health and Welfare - General Fund	**917,742**

BUSINESS DEVELOPMENT AND ASSISTANCE

EXECUTIVE DEPARTMENT

810000	Technology Business Development	
	Personnel	152,000
	Fringe Benefits	46,399
	Operating	352,525
	Capital	-
	Total	**550,924**

DEPARTMENT OF PLANNING, PRESERVATION AND SUSTAINABILITY

820000	Business and Neighborhood Services	
	Personnel	206,058
	Fringe Benefits	73,295
	Operating	6,000
	Capital	-
	Total	**285,353**

EXECUTIVE DEPARTMENT

153000	Youth Programs	
	Personnel	102,246
	Fringe Benefits	21,301
	Operating	11,766
	Capital	-
	Total	**135,313**
	Total Business Development and Assist. - General Fund	**971,590**

OTHER

920010	Capital Leases	
	Personnel	-
	Fringe Benefits	-
	Operating	4,887,514
	Capital	-
	Total	**4,887,514**
920131	Bond, GO 2014 Ref 4.375M GF	
	Personnel	-
	Fringe Benefits	-
	Operating	804,325
	Capital	-
	Total	**804,325**

920150	Bond, GO 2010 Series B 17.1M	
	Personnel	-
	Fringe Benefits	-
	Operating	1,624,188
	Capital	-
	Total	**1,624,188**
920160	Bond, GO 2014 22M	
	Personnel	-
	Fringe Benefits	-
	Operating	2,137,125
	Capital	-
	Total	**2,137,125**
	Total Other - General Fund	**9,453,152**

TRANSFERS OUT

932000	General Fund Transfers Out	
	Transfers Out	1,179,612
	Personnel	-
	Fringe Benefits	-
	Operating	-
	Capital	-
	Total	**1,179,612**
	Total Transfers Out - General Fund	**1,179,612**
TOTAL GENERAL FUND APPROPRIATION:		**171,049,901**

ENTERPRISE FUNDS

DEPARTMENT OF BUDGET, FINANCE AND REVENUE COLLECTIONS

020010	Old Slave Mart Museum	
	Personnel	104,135
	Fringe Benefits	39,362
	Operating	74,356
	Capital	-
	Total	**217,853**
021010	City Market	
	Personnel	-
	Fringe Benefits	-
	Operating	1,599,145
	Capital	60,000
	Total	**1,659,145**
021920	Bond, Revenue 2010 2.1M CM	
	Personnel	-
	Fringe Benefits	-
	Operating	185,255
	Capital	-
	Total	**185,255**

021930	Bond, Revenue 2010A 3.4M CM	
	Personnel	-
	Fringe Benefits	-
	Operating	317,635
	Capital	-
	Total	**317,635**
022005	Parking Management Services	
	Personnel	1,024,575
	Fringe Benefits	503,672
	Operating	169,839
	Capital	-
	Total	**1,698,086**
022010	Parking Tickets Revenue Collections	
	Personnel	218,822
	Fringe Benefits	109,150
	Operating	181,338
	Capital	-
	Total	**509,310**
022016	Parking Facilities Administration-ABM	
	Transfer Out	283,992
	Personnel	-
	Fringe Benefits	-
	Operating	9,805,323
	Capital	4,576,821
	Total	**14,666,136**
022035	Parking Lot - B.A.M.	
	Personnel	-
	Fringe Benefits	-
	Operating	3,750
	Capital	-
	Total	**3,750**
DEPARTMENT OF TRAFFIC AND TRANSPORTATION		
022045	Parking Meters	
	Personnel	184,008
	Fringe Benefits	74,105
	Operating	453,193
	Capital	-
	Total	**711,306**
DEPARTMENT OF BUDGET, FINANCE AND REVENUE COLLECTIONS		
022075	Parking Garage - Cumberland Street	
	Personnel	-
	Fringe Benefits	-
	Operating	270,000
	Capital	-
	Total	**270,000**
NON-DEPARTMENTAL		
022940	Bond SCE&G Revenue 1997 16.6M	
	Personnel	-
	Fringe Benefits	-
	Operating	1,224,904
	Capital	-
	Total	**1,224,904**

022942	Bond, GO 2009 18.1M	
	Personnel	-
	Fringe Benefits	-
	Operating	915,750
	Capital	-
	Total	**915,750**
022943	Bond, GO 2016 $12.715M Ref	
	Personnel	-
	Fringe Benefits	-
	Operating	341,944
	Capital	-
	Total	**341,944**
022956	Bond, IPRB 26.27M 2015-A PK	
	Personnel	-
	Fringe Benefits	-
	Operating	231,904
	Capital	-
	Total	**231,904**
022957	Bond, IPRB 5M 2015-B PK	
	Personnel	-
	Fringe Benefits	-
	Operating	1,514,333
	Capital	-
	Total	**1,514,333**
DEPARTMENT OF PARKS		
023010	JPR, Jr. Ballpark	
	Transfer Out	40,317
	Personnel	56,818
	Fringe Benefits	20,678
	Operating	886,792
	Capital	-
	Total	**1,004,605**
DEPARTMENT OF BUDGET, FINANCE AND REVENUE COLLECTIONS		
024010	Angel Oak	
	Personnel	76,383
	Fringe Benefits	24,436
	Operating	137,650
	Capital	-
	Total	**238,469**
027010	Charleston Visitor Center	
	Transfer Out	9,256
	Personnel	449,626
	Fringe Benefits	211,100
	Operating	424,306
	Capital	55,000
	Total	**1,149,288**
DEPARTMENT OF RECREATION		
028010	Municipal Golf Course	
	Transfer Out	397
	Personnel	733,243
	Fringe Benefits	313,016
	Operating	839,056
	Capital	-
	Total	**1,885,712**

TOTAL ENTERPRISE FUND APPROPRIATION: **28,745,385**

TOTAL APPROPRIATION: **199,795,286**

Section 2. The above mentioned appropriations shall be expended according to Sections 2-269 and 2-270 of the Code of the City of Charleston and schedules approved by the Committee on Ways and Means. When it becomes necessary to make a transfer within any department, miscellaneous appropriation above or operating transfers between funds, such transfers shall be made only upon the approval of the Chief Financial Officer or Deputy Chief Financial Officer provided, however, that they shall refer transfers in excess of $40,000 to the Ways and Means Committee for authorization. Encumbrances are considered reappropriated in the ensuing year and are inclusive in the overall budget for the ensuing year.

Section 3. The above appropriations are on a basis of twelve (12) months, and are effective as of January 1, 2017, but said appropriations for salaries and operations are subject to cancellation or amendment by City Council as any emergency may make necessary.

Section 4. The Mayor is hereby empowered in any emergency and for increased efficiency in administration of government or in the event of any vacancies in any department or division, to transfer any individual or individuals on the payroll from one department or division to another, and any funds from one department, division or administrative function to another.

Section 5. The Chief Financial Officer is hereby authorized to refer for final approval any proposed expenditures for salaries or supplies submitted by any department, board, or commission to the Mayor or the Committee on Ways and Means if, in his judgment such referral is advisable.

Section 6. That the Emergency Fund shall be allocated by the Mayor, the Chief Financial Officer or the Deputy Chief Financial Officer for improvements, adjustments and emergencies provided, however, that allocations in excess of $40,000 shall be referred to the Committee on Ways and Means for authorization.

Section 7. That if any section, item or portion of this ordinance shall be declared invalid by a court of competent jurisdiction, such invalidity shall not affect the remaining sections, items and portions hereof, which shall remain in full force and effect.

Section 8. All Ordinances and parts of Ordinances in conflict with this Ordinance shall be, and the same hereby are repealed only so far as they are in conflict herewith.

Section 9. This Ordinance shall take effect as of January 1, 2017.

Ratified in City Council this 20th day of December, in the Year of Our Lord, 2016, and in the 241st Year of the Independence of the United States of America.

ATTEST:

John J. Tecklenburg., Mayor

Vanessa Turner-Maybank, Clerk of Council

K6.)

Ratification
Number: 2016- _____

AN ORDINANCE

To raise funds for the fiscal year ending December 31, 2017 and to meet the appropriation of $199,795,286 authorized by ordinance 2016-_____, ratified 20th day of December, 2016 (AS AMENDED).

Be it ordained by the Mayor and Council members of Charleston, in the City Council assembled.

Section 1. The revenues of the City government applicable to the financing of the appropriations have been estimated and fixed as shown in the following items:

GENERAL FUND:		
Item 1.	Property Taxes	$ 89,668,870
	Less Local Option Sales Tax Credit	$ (17,850,600)
	Total	**$ 71,818,270**
Item 2.	Licenses	$ 32,211,026
Item 3.	Sales and User Charges	$ 436,900
Item 4.	Permits and Fees	$ 5,302,324
Item 5.	Rents and Concessions	$ 1,669,970
Item 6.	Fines and Forfeitures	$ 500,000
Item 7.	Penalties and Costs	$ 741,700
Item 8.	State of South Carolina	$ 22,410,326
Item 9.	Recreational Facilities	$ 1,583,912
Item 10.	Franchise Tax	$ 14,995,800
Item 11.	Commissioners of Public Works	$ 1,095,000
Item 12.	Miscellaneous Income	$ 1,236,444
Item 13.	Interest Income	$ 150,000
Item 14.	Federal Programs	$ 203,610
	Total General Fund	$ 154,355,282
	Total General Fund - Transfers In	$ 8,811,557
	Total General Fund - Other Financing Sources	$ 1,297,633
Total General Fund Revenues and Financing Sources		**$ 164,464,472**
ENTERPRISE FUNDS:		
Item 15.	Angel Oak	$ 243,600
Item 16.	Charleston Visitor Center	$ 1,149,288
Item 17.	City Market	$ 2,314,750
Item 18.	Joseph P. Riley, Jr. Ball Park	$ 859,500
Item 19.	Municipal Golf Course	$ 1,745,500
Item 20.	Parking Facilities	$ 28,660,176
Item 21.	Old Slave Mart Museum	$ 358,000
Total Enterprise Funds Revenue		**$ 35,330,814**
Total Revenues & Other Financing Sources		**$ 199,795,286**
Total To Be Appropriated		**$ 199,795,286**

Section 2. That for the purpose of providing the sum of $71,818,270 for the General Fund operations set forth in Item 1 above, a tax of 78.1 mills hereby is levied upon every dollar of value of all real and personal property in the City of Charleston to be appropriated for several purposes indicated in the annual Appropriations Ordinance and for the purpose of providing funds for drainage improvements hereby is levied a tax of four (4) mills upon every dollar of value of all real and personal property in the City of Charleston, and for the purpose of providing funds for public safety capital expenditures hereby is levied a tax of one and one-half (1.5) mill upon every dollar of value of all real and personal property in the City of Charleston.

Section 3. That for the purpose of deriving the revenue estimated in Item 10 above, there is levied a fee on all amounts received by any person, firm, or corporation from the sale of electric energy used within the corporate limits of the City of Charleston, except electric energy paid for by the City Council of Charleston, and also a fee on all amounts received by any person, firm or corporation from the sale of natural or manufactured gas used within the corporate limits of the City of Charleston, except gas paid for by the City Council of Charleston, to be paid as other fees herein of the City of Charleston are paid, and to be calculated on the amounts received from the first of January of the previous year through the thirty-first of December of the previous year, which fees shall be in addition to all other taxes and assessments. The total fee shall be five percent (5%) of the retail electric and gas revenues.

Section 4. All taxes hereby levied shall be paid on or before January 15, 2017.

Section 5. That for non-payment of taxes on real estate and other personal property (not motor vehicles) hereby levied in the manner and form hereinabove set out, penalties and costs shall be added and imposed as follows:

January 16, 2017 through February 1, 2017, three percent (3%) plus cost.

February 2, 2017 through March 15, 2017, in addition to the three percent (3%) herein specified, an additional seven percent (7%) plus cost.

After March 16, 2017, in addition to the three percent (3%) and seven (7%) herein specified, an additional five percent (5%) until paid, plus all costs of levy, collections, seizure and sale.

Provided, however, that this shall in no way be construed to extend the time for payments of taxes as hereinabove set forth, and the Officers of the City of Charleston, the County of Charleston or Berkeley County are authorized to proceed with the collection and enforcement by levy, sale or otherwise at any time subsequent to the said first day of February, 2017.

Section 6. The Sheriff of Charleston County or Berkeley County shall determine the date to sell all real property upon which taxes levied under this ordinance are unpaid; provided, however, nothing herein contained shall prevent the sale upon a subsequent date of real property not sold on the above mentioned date because of error, mistake, oversight or other cause.

Section 7. That the taxes herein levied shall constitute a specific lien on the property taxed paramount to all other liens, except those for State and County taxes, from the time the liability for said taxes shall have accrued for the full term of ten (10) years after the said taxes shall have been due and payable.

Section 8. That all funds collected under the authority of this ordinance, except as herein directed, are to be held, used and expended for expenses incurred and to be incurred for the fiscal year 2017 and all such expenses, including those represented by the issuance of tax anticipation notes shall be first paid and shall constitute a first lien upon all such funds, and also upon all to the above levy so far as may be necessary to meet the payment of the said tax anticipation notes for expenses incurred in the fiscal year 2017.

Section 9. That all the above items are to be paid as herein set forth so far as may be necessary and subject to the provisions of Section 8 of this ordinance, but any balances in any of the above items not used or specifically set aside for use, shall revert to the General Fund.

Section 10. That if any sections, item or portion of this ordinance shall be declared invalid by a court of competent jurisdiction, such invalidity shall not affect the remaining sections, items and portion hereof, which shall remain in full force and effect.

Section 11. This ordinance shall take effect January 1, 2017.

Ratified in City Council this 20th day of December, in the Year of Our Lord, 2016, and in the 241st Year of the Independence of the United States of America.

ATTEST:

_____

John J. Tecklenburg, Mayor

_____

Vanessa Turner-Maybank, Clerk of Council

L1.)

Ratification
Number_____

AN ORDINANCE

TO AMEND THE ZONING ORDINANCE OF THE CITY OF CHARLESTON BY CHANGING THE ZONE MAP, WHICH IS A PART THEREOF, SO THAT PROPERTY LOCATED ON ASHLEY HALL PLANTATION ROAD (WEST ASHLEY) (APPROXIMATELY 44.59 ACRES) (TMS #353-00-00-003 AND 353-00-00-004) (COUNCIL DISTRICT 2), BE ZONED SINGLE-FAMILY RESIDENTIAL (SR-1) CLASSIFICATION AND LANDMARK OVERLAY ZONE (LMK) CLASSIFICATION ON A PORTION OF THE PROPERTY. THE PROPERTY IS OWNED BY THE ESTATE OF ROSINA KENNERTY SIEGNIOUS.

BE IT ORDAINED BY THE MAYOR AND COUNCILMEMBERS OF CHARLESTON, IN CITY COUNCIL ASSEMBLED:

Section 1. That the Zoning Ordinance of the City of Charleston be, and the same hereby is amended, by changing the zone map thereof so that the below described property shall become a part thereof:

The property to be rezoned is described as follows:

Section 2. That the said parcel of land described above shall be zoned Single-Family Residential (SR-1) classification and Landmark Overlay Zone (LMK) classification on a portion of the property.

Section 3. This ordinance shall become effective upon ratification.

Ratified in City Council this _____day of _____ in the Year of Our Lord _____, in the _____ Year of Independence of the United States of America.

By: _____
John J. Tecklenburg
Mayor, City of Charleston

Attest: _____
Vanessa Turner Maybank
Clerk of Council

COPYRIGHT © SEAMON, WHITESIDE & ASSOCIATES, INC. 501 WANDO PARK BOULEVARD, SUITE 200 | MOUNT PLEASANT, SC 29464 | 508 RHETT STREET, SUITE 101 | GREENVILLE, SC 29601 THIS DRAWING SHALL NOT BE REPRODUCED IN ANY MANNER OR USED FOR ANY PURPOSE WITHOUT WRITTEN PERMISSION.

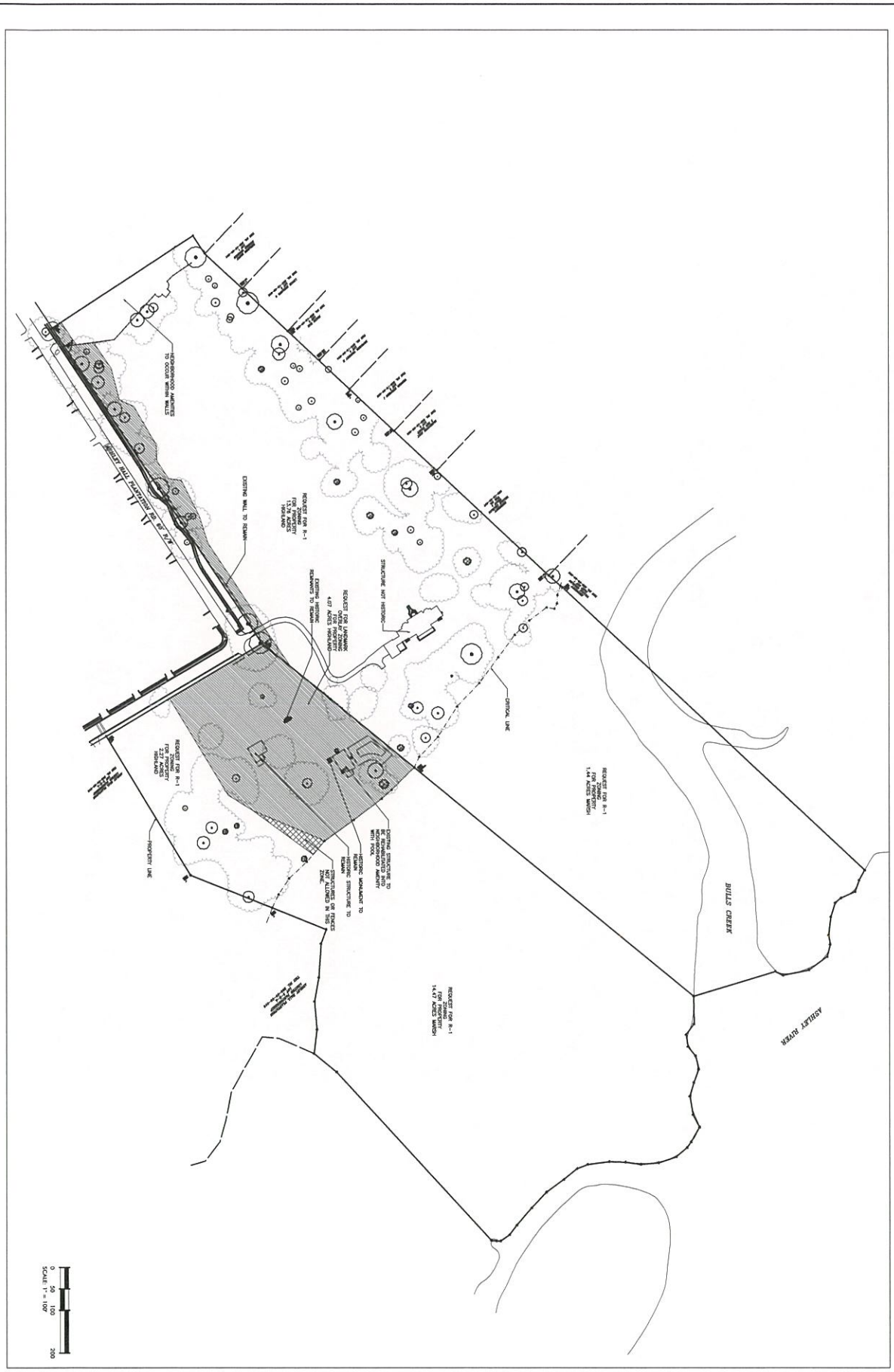

ASHLEY HALL PLANTATION

ZONING EXHIBIT

CITY OF CHARLESTON, SOUTH CAROLINA

SWA PROJECT: 7296
DATE: 12/13/16
DRAWN BY: DRS
CHECKED BY: WTE

REVISION HISTORY

ZONING EXHIBIT

SEAMON WHITESIDE & ASSOCIATES, INC.
SOUTH CAROLINA
COA No. C00472
STATE OF INCORPORATION

MOUNT PLEASANT, SC 843.884.1667
GREENVILLE, SC 864.233.7650
SUMMERVILLE, SC 843.894.1667
WWW.SEAMONWHITESIDE.COM

SW SEAMONWHITESIDE

City of Charleston

City Council
December 20, 2016

Zoning

Ashley Hall Plantation Rd (West Ashley)

TMS# 3530000003 & 004

approx. 44.59 ac.

Request zoning of Single-Family Residential (SR-1)
on all property
and Landmark Overlay Zone (LMK) on a portion.

Zoned Single-Family Residential (R-4)
in Charleston County.

Owner: Estate of Rosina Kennerty Siegnious

Area

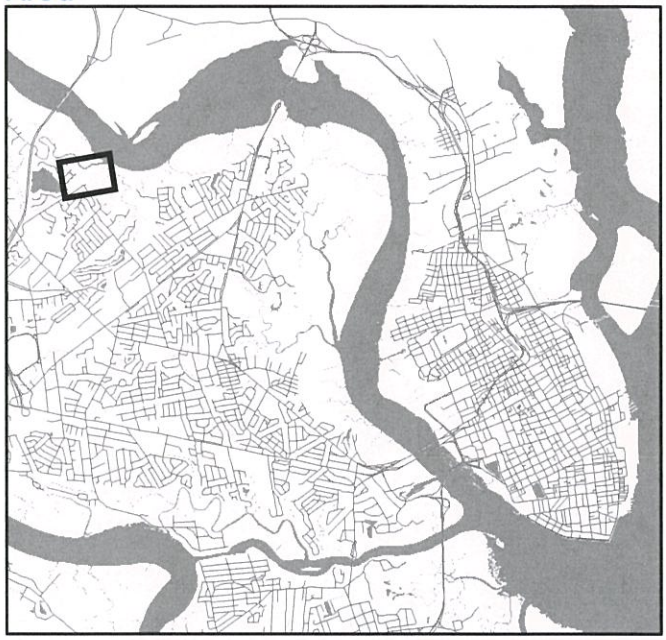

Location

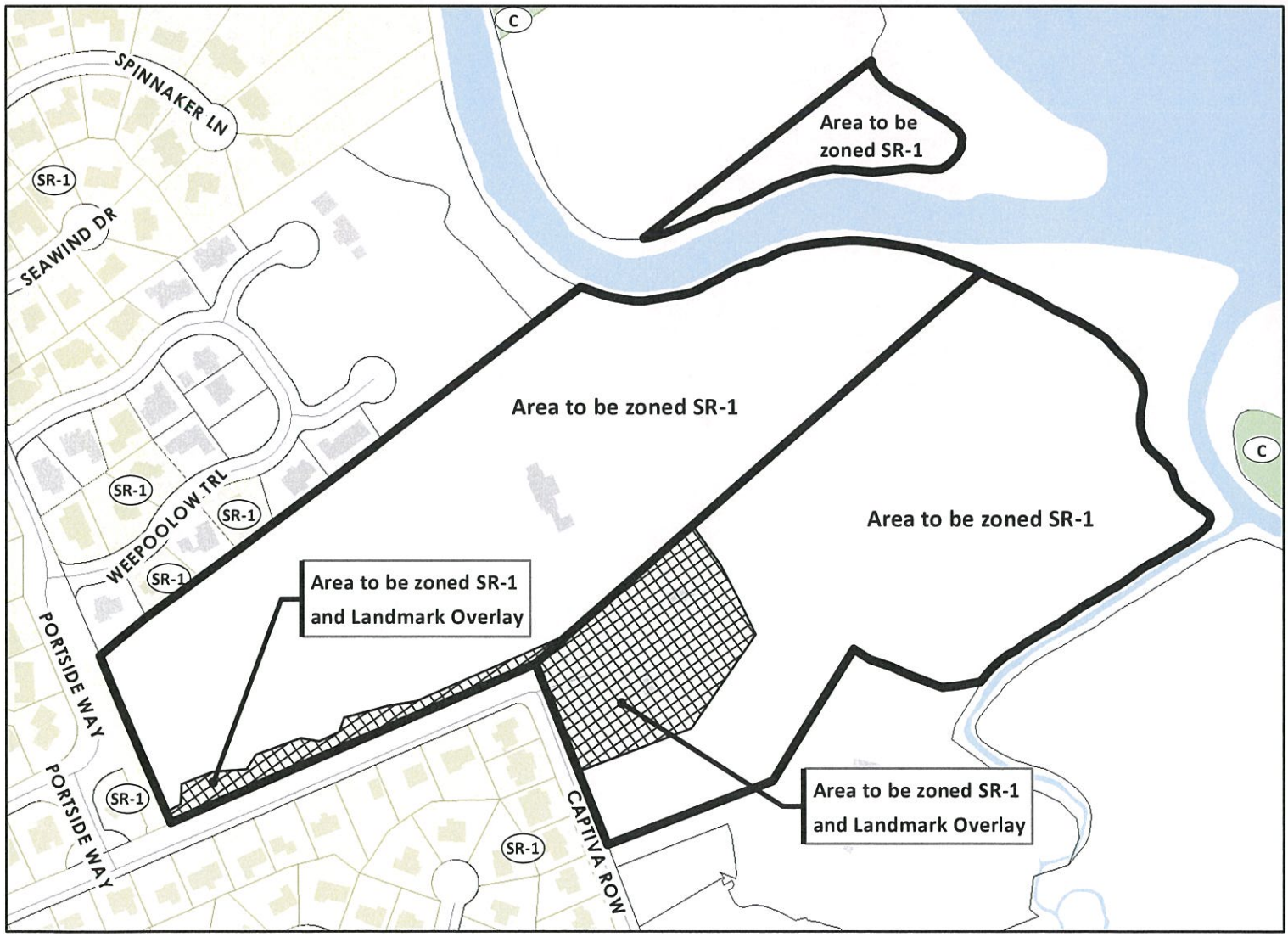

N

L2.)

Ratification
Number_____

AN ORDINANCE

TO AMEND THE ZONING ORDINANCE OF THE CITY OF CHARLESTON BY CHANGING THE ZONE MAP, WHICH IS A PART THEREOF, SO THAT 194 CANNON STREET AND 221 SPRING STREET (INCLUDING THE ADJACENT RIGHTS-OF-WAY OF SPRING STREET, VAUGHN STREET AND CANNON STREET) (PENINSULA) (APPROXIMATELY 2.75 ACRES) (TMS #460-10-04-013 AND 460-10-04-011) (COUNCIL DISTRICT 6), BE REZONED FROM THE 50/25 OLD CITY HEIGHT DISTRICT OVERLAY CLASSIFICATION TO THE 85/125 OLD CITY HEIGHT DISTRICT OVERLAY CLASSIFICATION. THE PROPERTY IS OWNED BY JEM MANAGEMENT CO AND CALFRAN PROPERTIES.

BE IT ORDAINED BY THE MAYOR AND COUNCILMEMBERS OF CHARLESTON, IN CITY COUNCIL ASSEMBLED:

Section 1. That the Zoning Ordinance of the City of Charleston be, and the same hereby is amended, by changing the zone map thereof so as to rezone the property described in Section 2 hereof by changing the zoning designation from the 50/25 Old City Height District Overlay classification to the 85/125 Old City Height District Overlay classification.

Section 2. The property to be rezoned is described as follows:

194 Cannon Street and 221 Spring Street (including the adjacent rights-of-way of Spring Street, Vaughn Street and Cannon Street) (Peninsula) (approximately 2.75 acres) (TMS #460-10-04-013 and 460-10-04-011)

Section 3. This ordinance shall become effective upon ratification.

Ratified in City Council this _____day of _____ in the Year of Our Lord _____, in the _____ Year of Independence of the United States of America.

By: _____
John J. Tecklenburg
Mayor, City of Charleston

Attest: _____
Vanessa Turner Maybank
Clerk of Council

City of Charleston

City Council
December 20, 2016

Area

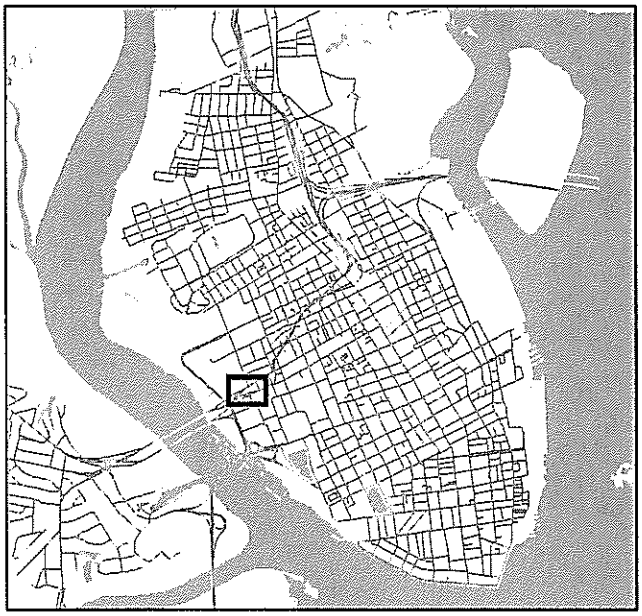

Rezoning

194 Cannon St & 221 Spring St
and adjacent rights-of-way (Peninsula)

TMS# 4601004013 & 4601004011

approx 2.75 ac.

Request rezoning from 50/25 Old City Height District to 85/125 Old City Height District.

Owner: JEM Management Co & Calfran Properties

Location

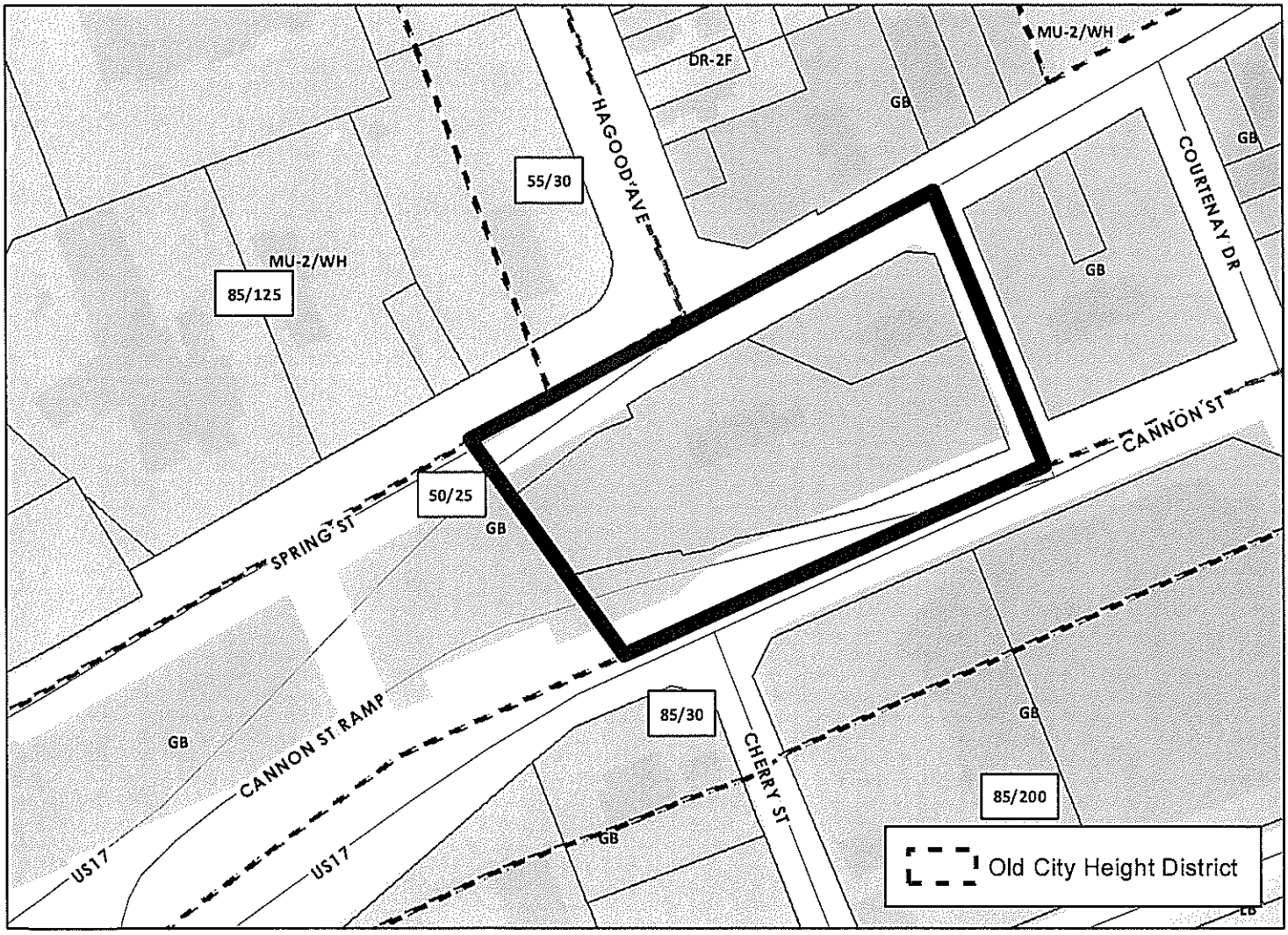

N